RADIATION EFFECTS IN CRYSTAL AND ATOMIC FREQUENCY STANDARDS*

T. M. Flanagan and R. E. Leadon
IRT Corporation, San Diego, California

INTRODUCTION

The increased use of precision frequency standards in environments where exposure to nuclear and natural radiation can be encountered has led to some detailed considerations of the effects of such radiation on the operability, stability, and accuracy of precision frequency standards. Quantifying these considerations requires combining of results from prior modeling studies on precision frequency standards (Ref. 1,2), from investigations of the effects of radiation on quartz crystals (Ref. 3-6) and from analyses on electronic systems (Ref. 7). It is the purpose of this paper to describe the results of studies to develop predictive models for precision frequency standards in radiation environments.

GENERAL EFFECTS OF RADIATION

We first consider the types of radiation and the effects on the components of a precision frequency standard. For our example, let us consider a precision frequency standard designed for satellite use. Such a standard not only must survive the radiation from the Van Allen belts but must also face the possibility of exposure to direct nuclear radiation from a nuclear detonation and the consequential enhancement of the electron belts.

The irradiating particles produced by a nuclear detonation include neutrons and gamma rays. In addition, energetic electrons are produced as secondary particles from the interaction of gamma rays with matter, and are emitted from radioactive fission products. The electrons from a nuclear detonation can become trapped in the earth's magnetic field, thus enhancing the electron flux in the Van Allen belts (Ref. 8).

The types of effects to be considered are (1) displacement effects, (2) ionization, and (3) chemical effects. Displacement effects are caused by collisions between incident nuclear particles and atoms in solids, resulting in the displacement of the struck atoms and possibly others. The

*This work was supported by the Defense Nuclear Agency under contract DNA001-75-C-0247.

principal source of displacement effects is the neutrons. Ionization effects, primarily evidenced as increased conductivity, are manifestations of the mobile electrons and ions produced by the interaction of the radiation with atomic electrons. Associated with ionization is the transfer of charge by secondary irradiations in circuit elements creating electric and magnetic fields within cavities — even those with good electrical shielding — and creating space charge in insulators. These latter effects are sometimes known as internal EMP effects. Chemical effects refer to changes in molecular composition that frequently result from recombination processes following ionization.

For our consideration of a precision frequency standard for a satellite, we assert (Ref. 9):

1. Neutron fluences are such that displacement effects are of concern only in semiconductor devices and in quartz crystals which depend on a high degree of crystallinity for proper operation. Designing circuits with adequate design margin to allow for semiconductor device degradation is a developed methodology and is beyond the scope of this paper. The effects of neutrons on quartz crystals are also small compared to the effects of the ionization.

2. Chemical effects are usually of little concern because the changes in properties due to chemical radiation effects become important only for exposures which are large compared to those which result in electronic system degradation. A possible exception to this is outgassing from the walls of a vacuum chamber.

Thus, the relevant effects of radiation for a precision frequency standard are:

1. Those which result from the intense ionization resulting from a nuclear burst. The gamma-ray ionization is assumed to be sufficiently intense that the semiconductor devices are driven into saturation and that darkening of any optical components must be considered.

2. Frequency and Q shifts from exposure of the quartz crystal oscillator to gamma rays and neutrons.

3. Secondary-electron currents which may alter the magnetic fields, send large currents down coupling lines, result in outgassing from vacuum

chamber walls, and produce charge in insulators.

4. Effects of the electron belts, both natural and enhanced. We anticipate changes in Q and frequency of the quartz crystals, degradation in the characteristics of semiconductor devices, and darkening of optical components from the electron belt dose.

EFFECTS OF RADIATION ON QUARTZ PRECISION FREQUENCY STANDARDS

When a quartz oscillator is exposed to radiation, both the electronics and the quartz resonator are affected. Let us consider the resonator first. The response of quartz crystals to radiation has been fairly well documented (Ref. 3-6), and the responses of various types of quartz are reviewed in the references. In general, it has been found that sweeping (i.e., electro-diffusing at elevated temperatures along the Z axis) reduces the response of quartz to radiation. The reduction in radiation sensitivity is such that, for precision frequency applications in a radiation environment, swept synthetic Z-growth quartz is the material of choice.*

The quartz resonator in a precision frequency standard will generally be located in an oven. The materials of the oven provide sufficient shielding that the total ionization dose to the quartz resonator is generally less than 10^4 rads. The effects of the neutrons from a pulse radiation is to produce a positive frequency shift which is small compared to the negative shift induced by the ionization from the gamma rays and the electrons. Hence, we consider only ionization effects in the resonators.

Following a pulse of transient radiation, changes in frequency and Q are observed. These changes show a partial anneal toward preirradiation values for about 20 min after the cessation of radiation, after which time the changes in Q and frequency are relatively stable. Changes which anneal within 20 min or so of the cessation of radiation are called transient shifts. The steady-state shifts are not permanent, and long-term drift in the crystal parameters is observed.

*The equivalent series resistance also increases following a pulse irradiation, and the increase can be large and persistent in some natural and unswept lithium-doped synthetic material (Ref. 4). Sweeping generally reduces this problem to insignificance.

Figure 1 is an idealized illustration of the change in frequency after irradiation, showing both the transient and steady-state shifts as a function of time following a pulse of radiation. The quantity f_0 is the original preirradiation frequency, f_{ss} is the steady-state frequency taken approximately 15 to 20 min after exposure, f(t) is the instantaneous frequency at any time t, and Δf_a is the annealable portion of the frequency change. This notation is from King and Sander (Ref. 4). The annealable fraction of the frequency change following a pulse of radiation reduced to unit dose is plotted in Figure 2. The results of several investigators are presented, and there is remarkable agreement in the data even though taken over a wide range of doses and at different frequencies. The behavior of the annealable fraction is not very sensitive to the type of material and is reasonably well represented by

$$\frac{\Delta f}{f_0} = 2 \times 10^{-11} \, t^{-1/2} \, D \, , \qquad (1)$$

where t is the time in sec and D is the dose in rad(SiO_2).

The magnitude of the steady-state frequency shift is variable from crystal to crystal even for the same type of quartz, and the response shows some changes which reflect the radiation history. The initial exposure to a low dose [less than about 10^3 rad(SiO_2)] produces a frequency shift of a few parts in 10^8 which can be either positive or negative, after which the rate of frequency shift with dose drops significantly.* In the range from a few thousand rads to approximately 10^4 rads, resonators of good swept synthetic quartz can be found which will shift about 5×10^{-13} per rad(SiO_2).

As mentioned above, the steady-state frequency shift is generally measured about 20 min after exposure to a pulse of radiation. The selection of 20 min is a somewhat arbitrary choice, since the frequency continues to drift. However, the drift/sec is small compared to either the steady-state (20-min) or the transient drift discussed above. Hence, it is convenient to describe the shifts which occur after 20 min as an enhanced drift rate. The magnitude of the enhanced drift rate is not as well documented as the effects discussed above. What has been observed is that pulses of radiation

*Resonators for use in radiation environments are often exposed to doses of a few thousand rad(SiO_2) prior to installation in the oscillator. Such exposures can be used both as a screening procedure and as a conditioning procedure to achieve the lower radiation response.

in the 10^3 to 10^4 rad range result in a drift rate of about 1×10^{-9} per day or less for a few days after exposure. If no further irradiation occurs, the drift rate returns to its preirradiation value (on the order of a few parts per 10^{11} per day within a few days.

PASSIVE FREQUENCY STANDARD MODELING

Let us now turn our attention to passive frequency standards. By passive frequency standard we mean a device in which a high-quality quartz oscillator provides the output. The drift of the quartz oscillator is corrected by a feedback loop which references the quartz frequency to an atomic resonance. The cesium beam standard and the rubidium vapor standard are the most common of this type and will be used as examples in this paper. There are many ways of implementing the concept of a quartz oscillator locked to an atomic resonance device through a control loop, but a common modeling methodology obtains for systems with a first-order control loop. Due to the complexity of the systems, it is not practical to have one complete model which can be applied in all situations in a radiation environment. It is more convenient and informative to utilize several simple models, each of which is useful and adequate for a particular situation but which must be used with judgment because of its limitations.

We first distinguish between catastrophic effects which cause effective failure of the standard and effects which leave the standard operating but with degraded performance. For the purposes of this paper, catastrophic effects are those which result in a cessation of function of some critical element of the system (for example, a semiconductor device burnout). Design solutions to such problems are not unique to a frequency standard but are part of the library of tricks of the radiation effects circuit engineer, and will largely be ignored in this paper. What we wish to do is model the principal radiation effects in precision frequency standards.

Referring to Figure 3, we assume a first-order loop in which the atomic resonance device is presented as a blackbox that puts out a linear error voltage equal to $K_B \Delta f/f_0$ plus some noise. This voltage is amplified (A) and coupled to the input of an integrator. The integrator can take many forms but basically has an output which stores the integral of the error voltage over time. The output voltage of the integrator corrects the oscillator which provides the primary output.

The output of the oscillator is the nominal frequency f_1 plus a correction proportional to V_0 plus some phase noise. The frequency f_1 is multiplied by a constant M which gives a frequency close to the atomic resonance frequency. Since the atomic resonance frequency is usually not an integral multiple of the basic oscillator frequency, a separate synthesizer is used to make up the difference. This synthesizer is locked to the basic oscillator; we have represented a digital technique for doing that lock. The integral multiple of the oscillator frequency is added to the synthesizer frequency to give the input frequency to the atomic resonance device.

The overall loop gain of the system, as described by Figure 3, can be written as

$$K_L = \frac{1}{\tau_L} = \frac{K_0 K_B}{RC} , \tag{2}$$

where K_0 relates the error signal to the frequency difference as seen by the Cs tube and K_B relates the frequency error into the Cs tube to the error voltage at the input of the integrator. As Eq. 2 indicates, the loop time constant τ_L involves, but is not equal to, the integrator time constant RC.

For modeling non-catastrophic radiation effects, errors are categorized as (1) steady offset errors, (2) random errors, and (3) transient errors. A catalog of errors which must be considered under each of these categories can be derived by considering those factors which affect stability and accuracy. A certain subset of those factors is perturbed by radiation and must be modeled as one of the types of errors above.

For small perturbations, the equation of motion for the system (closed loop) can be approximated as

$$\frac{d(\Delta f/f_0)}{dt} = -K_L(\Delta f/f_0) + F(t) , \tag{3}$$

where F(t) is some exterior frequency perturbation such as an open-loop oscillator drift rate, and K_L is as in Eq. 2. A steady offset implies

$$\frac{d(\Delta f/f_0)}{dt} = 0 ,$$

and by substituting the appropriate open-loop F(t), the steady-state offset can be calculated.

Random errors are modeled as noise generators and the model is similar to that developed by Cutler and Searle (Ref. 1). Dominant noise sources in passive frequency standards are the quartz oscillator phase noise and the noise in the atomic resonance cell.

For the transient errors which result from a nuclear burst, the nonlinear effect of saturation of the electronics is combined with Eq. 3, which is applied when the system returns to linear operation. Let us now apply these models to the dominant environments.

DOSE-RATE EFFECTS FROM ELECTRON BELTS

Consider first which error terms are significant in the presence of the electron flux in the enhanced radiation belts. The flux in the enhanced belts is relatively low (3×10^8 to 10^9 e/cm^2-sec), so that the semiconductor device operation is not perturbed by photocurrents. Thus, we can neglect disturbances in most electronic circuits. However, the low-rate background will induce some noise in the detector in the resonance device (electron multiplier in a Cs beam tube or the optical detector in the Rb gas cell). We treat this noise from the electron belts as a white noise which influences the Allan variance through

$$\sigma_{\dot{\phi}} = \sigma_0 \frac{(S/N)_0}{(S/N)_{\dot{\phi}}} \tag{4}$$

where the σ's designate the Allan variance, S/N is the signal-to-noise ratio from the resonance device, and the subscripts indicate a zero or a $\dot{\phi}$ electron flux, respectively. The magnitude of this effect is system-dependent. The existence of this noise source has been verified in a simulation experiment performed at NRL, and at 3×10^8 e/cm^2-sec, an approximate increase of 20% in the $\sigma(2,\tau)$ curve was observed for a Frequency and Time Systems, Inc., Cs beam tube. The effect should be less for a Rb system optical detector, but the effect is so dependent on the amount and type of materials surrounding the detector that the experiments should be performed for each device considered.

EFFECTS OF DOSE FROM ELECTRON BELTS

The ionization dose due to the enhanced electron belts to electronic devices behind 0.040-inch Aℓ boxes accumulates at about 10^5 rad/day. An ionization dose of this magnitude causes surface charge buildup in semiconductor devices. The

manifestations in terminal characteristics are gain degradation in transistors, changes in reference voltage elements, and increased offsets in operational amplifiers. For most circuits, the design and parts selection methods are not unique to the precision frequency standards, but certain aspects are of special importance.

The changes in voltage reference elements which determine the resonator magnetic field require critical consideration, as do offsets in linear integrated circuits in voltage regulators. Changes in the C-field current are particularly troublesome. For changes in C-field current, $\Delta f/f_0 \simeq 3.5 \times 10^{-10}\ \Delta I/I$ for Cs, and $\Delta f/f_0 \simeq 2.5 \times 10^{-9}\ \Delta I/I$ for Rb. Thus, to hold the frequency to 2×10^{-13}, the C-field current must not change by more than 0.06% for Cs and 0.008% for Rb. This places a severe hardening requirement on the power supplies.

Offsets in the integrator operational amplifier produce large frequency offsets which increase with radiation. The condition for null in the control loop of Figure 3 is zero current in the integrator capacitor. Thus, the loop will compensate by a frequency error for offset currents and offset voltages in the integrator operational amplifier. The total error voltage at the integrator output from offsets is

$$V_e = I_{OS}\ R + V_{OS}\ . \tag{5}$$

A frequency error at the Cs tube will result which produces an error signal at the integrator inputs to cancel V_e. The loop again will then be null. Since the error voltage at the output of the Cs tube is

$$V_e = K_B\ \Delta f/f_0\ , \tag{6}$$

the condition for null is

$$K_B\ \Delta f/f_0 = I_{OS}\ R + V_{OS} \tag{7}$$

or

$$\Delta f/f_0 = \frac{1}{K_B}\ (I_{OS}\ R + V_{OS}) \tag{8}$$

The I_{OS} and V_{OS} are functions of dose. To obtain frequency error, empirical functions for I_{OS} and V_{OS} as a function of dose must be substituted into Eq. 8. As a numerical example, assume RC = 1 sec, $K_0 = 10^{-12}$, $\tau_L = 10$ sec, and $K_B = 10^{11}$. Generally, the radiation-induced V_{OS} dominates and $\Delta f/f = 10^{-13}\ V_{OS}$ (mV). Operational amplifiers are available which do not change V_{OS} significantly at 10^5 rads and which change

by 3 to 5 mV at 10^6 rads. Thus, a $\Delta f/f_0$ of 3 to 5 x 10^{-14}/day is achievable by careful parts selection. Lower offsets can be achieved with modest shielding.

The quartz oscillator experiences an increased drift rate due to the accumulated dose from the electron belts. To use another example, if the oven materials are equivalent to 0.5 cm (1.35 g/cm^2) Aℓ, the average 1-day dose from the enhanced belts is about 10^4 rads. For a good swept synthetic resonator, the frequency of the quartz will drift about 5 x 10^{-9}/day or 6 x 10^{-14}/sec. Since the change is small in a time τ_L, we can treat this as a drift term and compute the frequency error from Eq. 3:

$$\Delta f/f_0 = \tau_L \, F(t) = 6 \times 10^{-14} \, \tau_L \, . \qquad (9)$$

For $\tau_L = 10$ sec, the frequency error is about 6 x 10^{-13} at the end of one day.

The glasses in a Rb gas cell will experience some darkening as a result of the accumulated dose. This will reduce the light intensity at the cell and at the detector. Qualitatively, the light intensity has two effects on the operation of the gas cell standard. A decrease in the light intensity decreases the signal-to-noise ratio, and a change in the light intensity induces a frequency shift. The magnitude of the light intensity shift is dependent on the buffer gas pressure, magnetic field, and optical pumping conditions. Figure 4 shows the light intensity shifts obtained by three different groups of investigators. The buffer gas pressure and pumping conditions are indicated on the figure. These experiments provide some bounds for the light intensity shifts, which range from 2 to 10 x 10^{-11}/% change in intensity. Data taken at room temperature on borosilicate glasses would seem to indicate that the radiation-induced absorption coefficients near 7800 Å are about 2 x 10^{-3} cm/rad. Based on this estimate, we would expect frequency shifts in the vicinity of several parts in 10^{12} for 10^3 rads. However, this data is taken at room temperature rather than at the Rb cell operating temperature. The shifts expected from this data are undoubtedly too large.

EFFECT OF A PULSE FROM A NUCLEAR BURST

The list of factors which affect the accuracy and stability of a frequency standard is a long one, but fortunately most error sources do not change significantly with radiation. The important effects of a nuclear burst are those listed

briefly in Section 2. In this section we discuss each in as quantitative a way as possible.

The effects of a nuclear burst on the open-loop quartz oscillator have been discussed above. When the quartz oscillator is coupled to an atomic resonance device in a control loop, the open-loop frequency errors will ultimately be nulled to insignificance. Phase errors, which are proportional to $(\Delta f/f_0)_{SS}\ \tau_L$, will result for steady offsets in quartz. As long as the control loop remains linear, the effects of the annealable portion of the open-loop frequency shift will integrate to zero phase error in a few time constants. Since the electronics saturate as a result of the ionization and since the transient frequency shift resulting from ionization may also saturate the loop electronics, the loop is not expected to be linear through the nuclear burst. Thus, the phase correction is not perfect, and the amount of error must be calculated for each system and environment.

The increased drift rate following a pulse of nuclear radiation will result in a closed-loop frequency error of less than $2.3 \times 10^{-14}\ \tau_L$. This frequency error will persist for a few days after the burst.

The optics in the Rb cell will darken with the pulse, and some of the darkening will anneal in periods extending over several seconds. At present, we know of no data on the magnitude or persistence of the effect.

Saturation of the electronics causes significant perturbation of the error loop. Saturation of the linear ICs implies that the output of the error amplifier (A) and of the integrator will assume the power supply voltages and both ICs may assume the same polarity. The input to the integrator will remain saturated for a recovery time (on the order of 10^{-5} sec), but the voltage at the output of the integrator will persist at the power supply voltage until removed by a corrective error signal. Depending on the system, this could be a catastrophic effect since the full-scale output of the integrator may shift the oscillator more than a resonant line width of the atomic device. Locking on the wrong resonant peak or simply not having enough signal to allow recovery of the integrator in a reasonable time could result. Clearly, a non-volatile integrator is required for a pulsed nuclear environment.

Usually the synthesizer is phased-locked to the main oscillator. Saturation of the electronics will cause some relative phase error to appear in the synthesizer loop,

which will be corrected by a synthesizer frequency shift. This shift will produce a transient frequency error which will be nulled out when the synthesizer loop regains lock.

In the Rb cell, since the frequency of the resonant transition is temperature-dependent, a pulse of nuclear radiation, which will cause a rise in temperature of the gas cell, will produce a frequency error. For typical conditions, the frequency temperature dependences are linear and in the range of 5 to 7 x $10^{-10}/°C$. For a dose of D rads, the temperature rise in the material is given by

$$\Delta t = \frac{2.4 \times 10^{-6}}{C} D ,$$

where C is the specific heat. This results in a $\Delta f/f_0$ of the order of 2 x 10^{-15} D, which is a significant effect for a dose of 10^3 rads or greater. This effect of the temperature rise will disappear as the gas cell returns to its normal temperature.

SUMMARY

Consideration of the stability and accuracy of passive atomic frequency standards in a radiation environment have led to models which can be used to predict error budgets. Some terms in the error budget must be determined experimentally. The error budget in a radiation environment indicates that a hardened integrator and C-field supply are critical items. When the electronics are hardened, the radiation-induced shifts in the quartz oscillator will dominate the error budget.

ACKNOWLEDGMENTS

The authors would like to express their appreciation to individuals whose information and counsel were invaluable in the performance of this work: Captain Richard Stead, DNA; Les Palkuti, C. A. Bartholomew, and Robert Moore, NRL; V. A. J. van Lint, consultant; Robert Kern, Frequency and Time Systems; Martin Bloch, Frequency Electronics; J. Barnes, David Allan, and Helmut Hellwig, NBS.

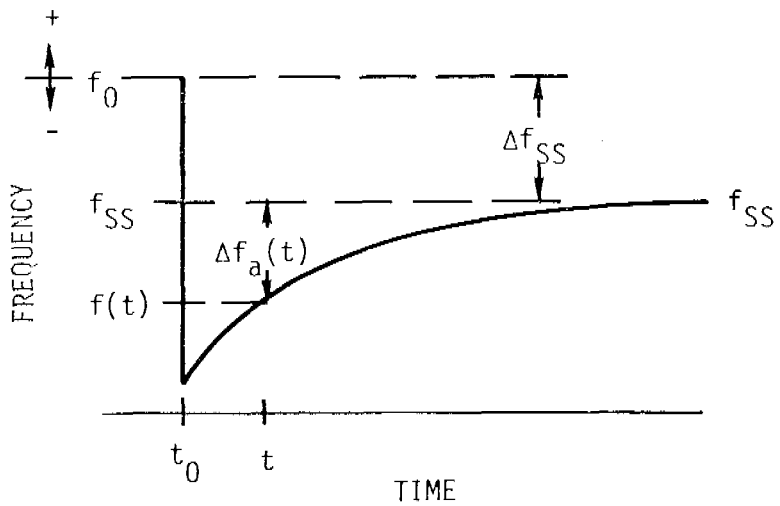

f_0 = ORIGINAL, PREIRRADIATION FREQUENCY

f_{SS} = STEADY-STATE FREQUENCY (∿15 MIN AFTER EXPOSURE)

f(t) = INSTANTANEOUS FREQUENCY AT ANY TIME t

Δf_a = ANNEALABLE PORTION OF FREQUENCY CHANGE

RT-12885

Figure 1. Typical behavior of frequency versus time for quartz resonators following an x-ray exposure pulse (Ref. 4)

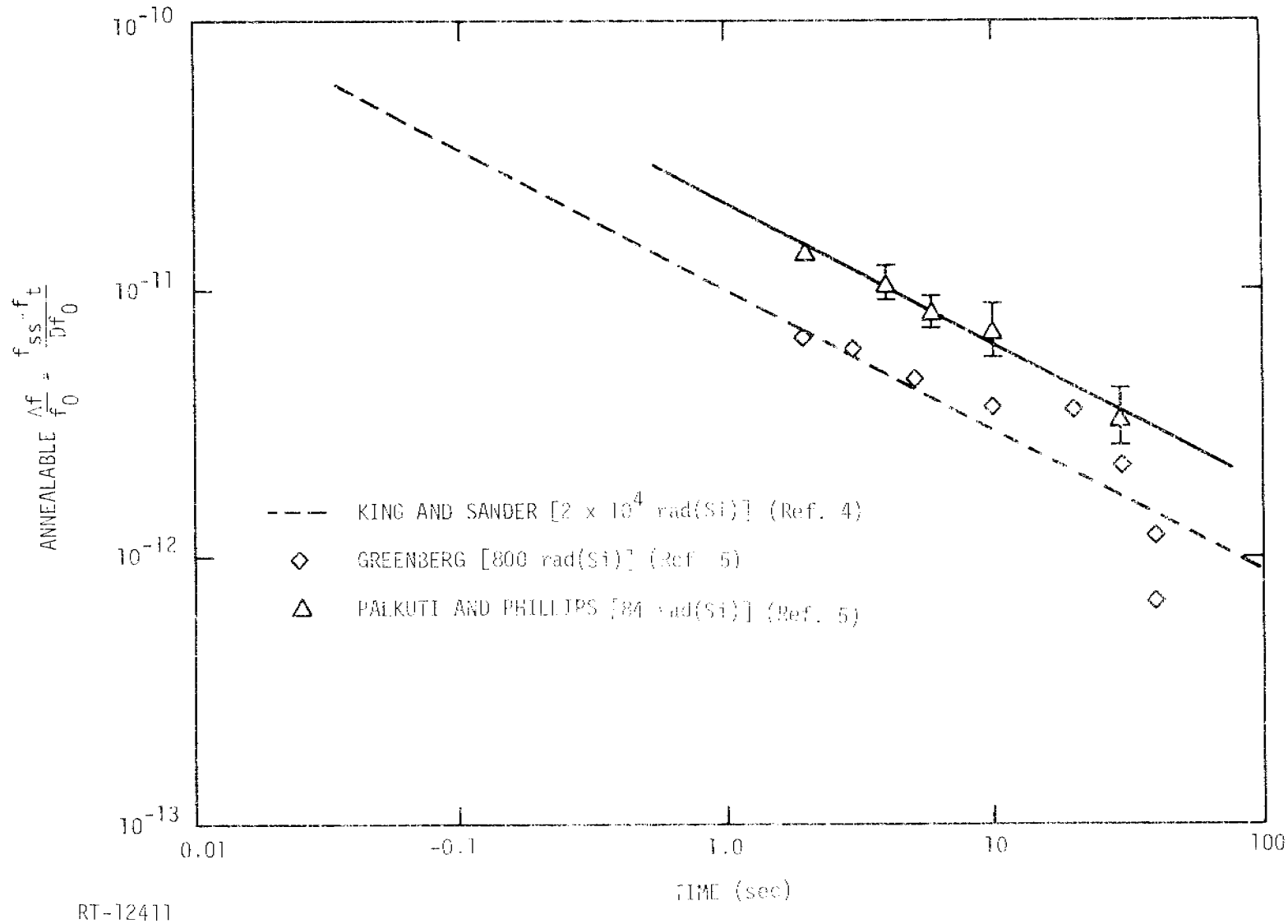

RT-12411

Figure 2. Annealable frequency shift versus time for swept synthetic resonators

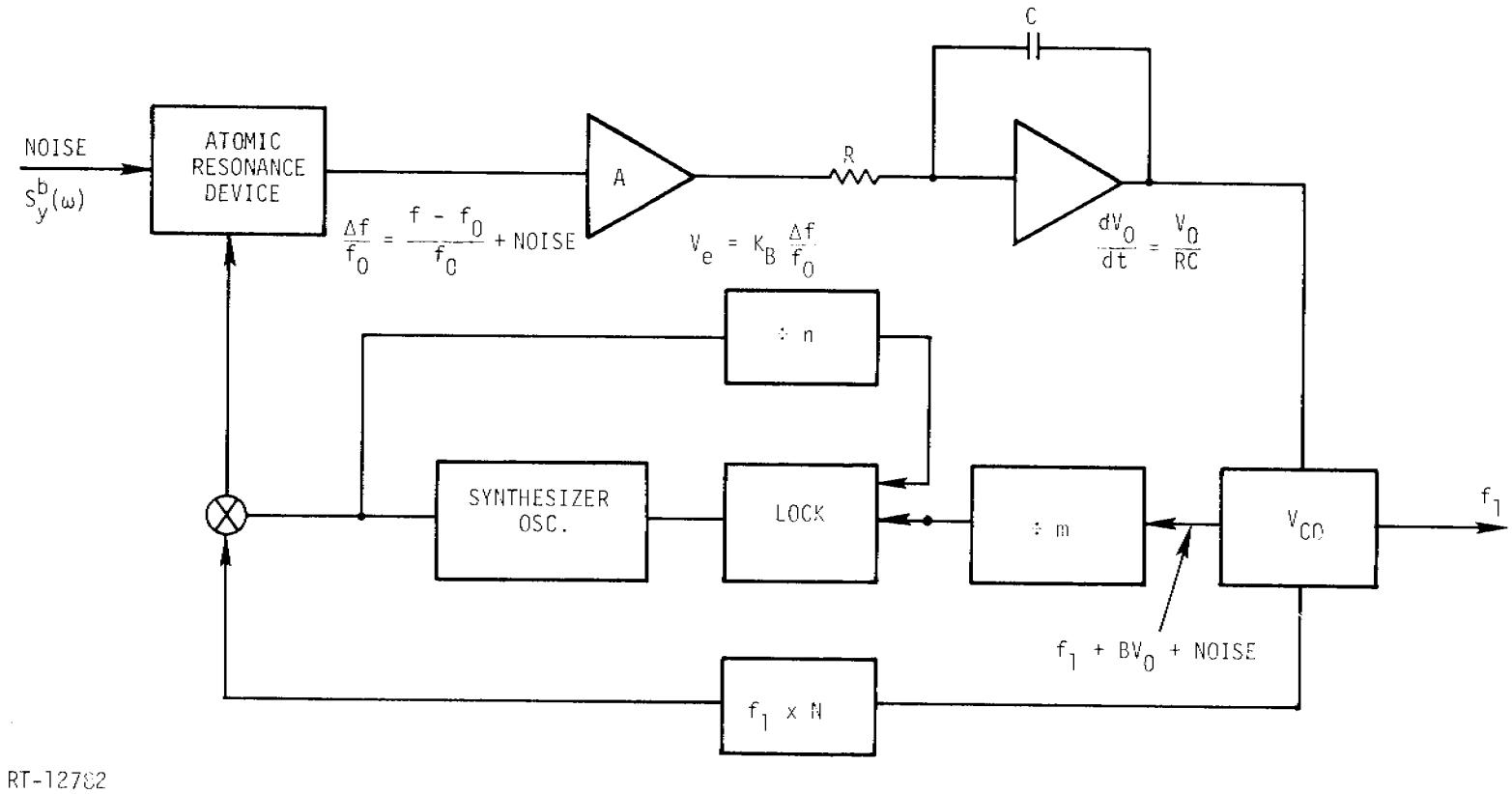

Figure 3. Block diagram of passive atomic frequency standard

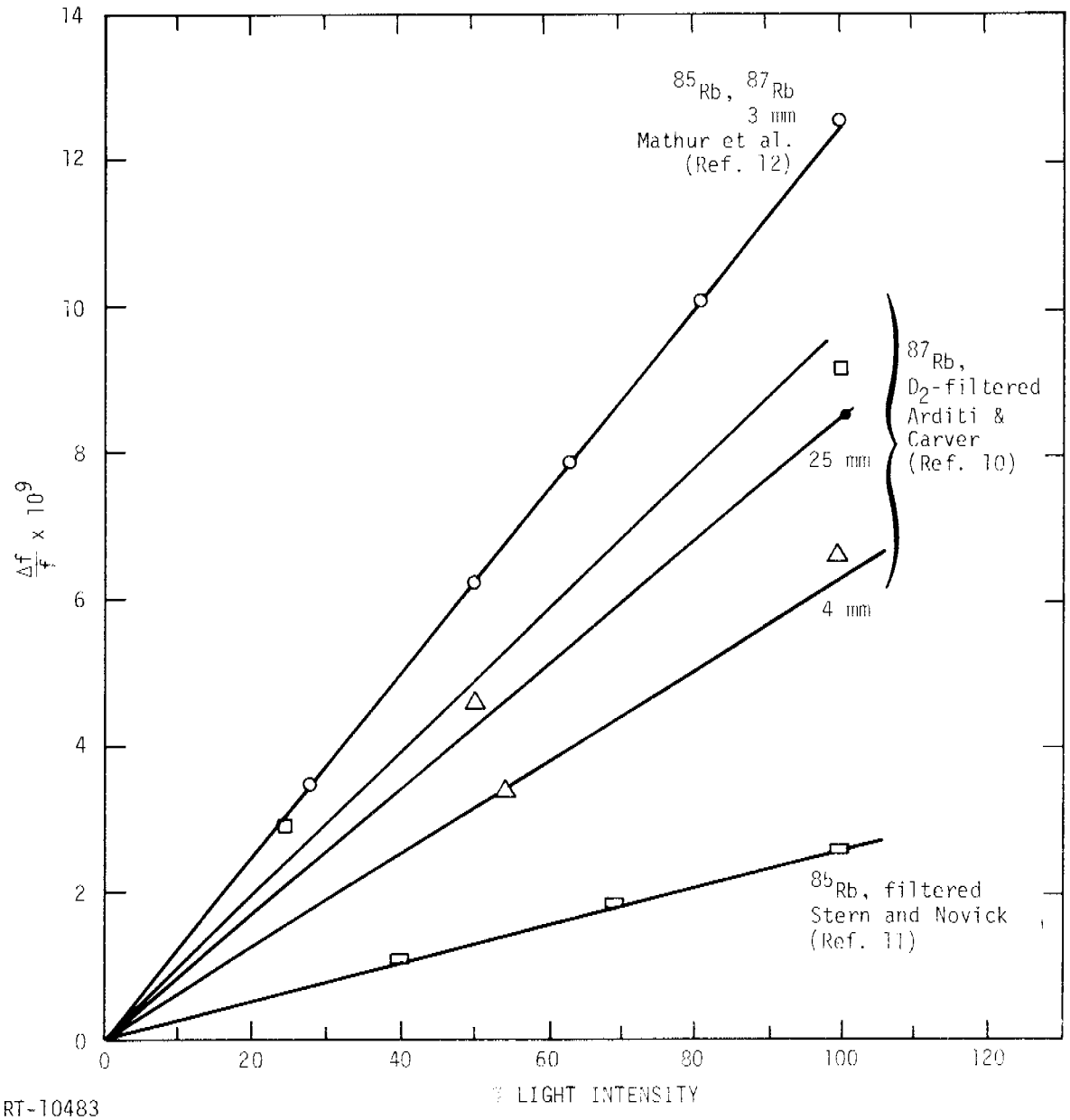

RT-10483

Figure 4. Light shifts in Rb (0,0) h_{fs} resonance measured in ^{87}Rb by ^{85}Rb (Mathur et al.), D_2-filtered ^{87}Rb exciting ^{87}Rb (Arditi and Carver), and filtered ^{85}Rb exciting ^{85}Rb (Stern and Novick)

REFERENCES

1. L. S. Cutler and C. T. Searle, Proc. IEEE, Vol. 54, 136, February 1966.

2. R. Lacey, A. Helgesson, and J. H. Holloway, Proc. IEEE, Vol. 54, 170, February 1966.

3. B. R. Capone, A. Kahan, R. N. Brown, and J. R. Buckmelter, IEEE Trans. Nucl. Sci. NS-17, 217 (1970).

4. J. C. King and H. H. Sander, IEEE Trans. Nucl. Sci. NS-19, 23, December 1973.

5. L. J. Palkuti, D. Phillips, and R. Phillips, U.S. Government Memorandum (USNRL)5210-187, August 14, 1974.

6. T. M. Flanagan and T. F. Wrobel, IEEE Trans. Nucl. Sci. NS-16, 130, December 1969.

7. Cf. IEEE Trans. Nucl. Sci. December 1965-75.

8. The Trapped Radiation Handbook, DNA 25244, December 1971.

9. R. A. Poll, IEEE Trans. Nucl. Sci. NS-17, 83, December 1970.

10. M. Arditi and J. R. Carver, Phys. Rev. 109, 1012 (1958), 112, 449.

11. W. A. Stern and R. Novick, IEEE Trans. Inst. & Meas. IM-21, 99 (1972).

12. B. S. Mathur, H. Tang, and W. Happer, Phys. Rev. 171, 11 (1968).

QUESTION AND ANSWER PERIOD

DR. WINKLER:

Can you give us any estimate of the difficulties of protecting Hydrogen Masers in such inclement conditions, remembering that the coefficient for the magnetic sensitivity is about 42 times larger than it is for cesium? On the other hand, you operate at about 50 times smaller magnetic fields so you regain that, but still you have to control the magnetic field of 1 milligauss to about .01 percent of its value, so what is going to be the effect of that radiation on the shield and on the current supply?

MR. FLANAGAN:

Let me take the last one first, namely, the effect on the shield. We have done some current injection tests on magnetic shield materials and have -- first of all, our intuitive feeling was that for very short pulses, which these electron currents are, there is not enough time to switch the domains. That was just a rough feeling we had. We did some experiments on some Frequency and Time System shields and that seemed to have been borne out. We did not measure with the kind of precision that you were talking about, nor at the kind of magnetic field levels because, of course, the levels are rather high for cesium.

I would say that one of the first things that I would look at would be to compute the induced currents and then do some good current injection testing to find out whether or not we had seen anything. It has been a concern of mine since the area or the volume of the magnetic shield in the maser is so much larger.

With respect to the second point, the controlling of the magnetic field current supply, as I said, by careful design, by part selection and by shielding, if you can design a supply which will survive five years of normal component aging without degrading, then we can design one that will do the same thing in the space environment. There are other areas of concern, namely outgassing from chambers and degradation of walls that one starts to get concerned about and I don't have enough empirical information right now to be able to say anything about that.

MR. RUEGER:

One of the most serious problems about these radiation hardening of time sources is to keep continuity of the signal output. Have you some solution to give the necessary flywheels so that there is no interruption in the quality of the pickup on phase of the output timing signals?

MR. FLANAGAN:

I think it has been borne out a little bit by computer analysis and somehwat by tests and it has to do with using the final output circuitry as a flywheel. You just have to design your system in such a way that the final output circuitry has a large enough Q with the semiconductor saturated so that it will continue to flywheel until they recover.

If the Q of the system is sufficiently high, then it will continue to flywheel even in the absence of driving or amplifying component.

DR. VESSOT:

With regard to magnetic field conditions in the hydrogen maser, what Dr. Winkler says is correct. I have just done a thumbnail calculation. It turns out that running at a half a millioersted which is the way we run the maser for our space experiment, the effect is a part in 10^{12} times delta I over I, which compares quite favorably with 3.5 in 10^{10} and 2.5 in 10^{9} for cesium and rubidium. This comes about by the fact that the field is running substantially lower as was pointed out earlier.

The other thing, though, that seems to me almost intuitive is the phase lock loop is far less likely to be perturbed in terms of long term frequency than a frequency lock, notably that it does not have the long term integration that characterizes so many of the frequency loops that we know are used on cesium instruments and rubidium instruments. So, I think there may be an advantage there, although, it is probably a pretty slender one in the fact that the dose rates that are being mentioned here are rather catastrophic.