APPLICATIONS OF PTTI TECHNIQUES IN COMMUNICATIONS SYSTEMS

Dr. Harris A. Stover
Defense Communications Engineering Center
Reston, Virginia

ABSTRACT

Time and time interval have always been of importance in electrical communications. Ronalds synchronized equipment for communicating between two locations in 1816 and Samuel Morse used relative time intervals for symbol identification in his first commercial electrical telegraph system in 1844. Today, time and time interval are of even greater importance, pervading nearly every area of the communications field. Also, the radio spectrum is becoming crowded, and more precise timing can be one tool for its more efficient use. As applications of digital communications increase, there is a concomitant increase in synchronous transmission, spread spectrum transmission, time division multiplexing, time division switching, and time division multiple access to communications satellites. In the future, extensive high capacity switched digital communications networks will require timing coordination among the many nodes of the network. The use of a precise standard time such as Coordinated Universal Time (UTC) for fulfilling many of the communications timing requirements expected to arise in the future should be considered.

GENERAL DISCUSSION

At first thought it might seem that the applications of PTTI in communications could simply be listed and the relationship of each application to PTTI indicated. It is not really that simple. So closely are time and time interval interwoven with electrical communications that it could almost be said that they form the very fabric of electrical communications. A brief look at journals in the field of communications engineering reveals that most mathematical expressions employed are functions of time. They occur in nearly all areas of study related to electrical communications. This is even more evident when we consider that functions of frequency are essentially functions of time because of the direct correspondence between frequency and

time resulting from the Fourier and Laplace transforms and their inverses as shown in equations (1) through (4).

$$(1) \quad G(f) = \int_{-\infty}^{\infty} g(t)e^{-j2\pi ft}dt$$

Fourier Transform

$$(2) \quad g(t) = \int_{-\infty}^{\infty} G(f)e^{j2\pi ft}df$$

Inverse Fourier Transform

$$(3) \quad F(s) = \int_{0}^{\infty} f(t)e^{-st}dt; \; s = \sigma + j\omega, \; \omega = 2\pi f$$

Laplace Transform

$$(4) \quad f(t) = \frac{1}{2\pi j}\int_{\sigma-j\omega}^{\sigma+j\omega} F(s)\, e^{st}dt; \; s = \sigma + j\omega, \; \omega = 2\pi f$$

Inverse Laplace Transform

Because of the relationship established between time and frequency by these two sets of transformations, and also because of the importance of time and frequency functions to communications, it is often said that communications engineers use the dual languages of time and frequency. The question of whether a time or frequency function is a PTTI function depends upon the frequencies, time intervals, and time accuracy being used and also upon the definition of PTTI. In general, high frequencies imply high time-interval accuracy and long time intervals imply high frequency-accuracy. Many applications of time and time interval in communications are candidates for improvement through increases in precision. Since communications engineers are so consistently involved with applications of time, they usually don't perceive the extent of this involvement; and because they normally work in terms of phase relationships

rather than nanoseconds and picoseconds, they usually don't perceive the degree of time precision that they employ.

To further observe the close relationship between communications and time (frequency), consider some of the broad areas of study related to communications engineering. Circuit theory usually includes both network analysis and network synthesis. In addition to various active elements in which time functions are involved, electrical circuit theory employs three types of passive elements: resistors, capacitors, and inductors. The properties of these basic elements are usually defined by their current and voltage relationships as functions of time. For a given network (collection of elements connected or coupled together), network analysis is concerned with determining the response (voltage or current) of the network as a function of time (or frequency) for a given excitation (voltage or current) as a function of time (or frequency). Network synthesis provides the reverse procedure of defining a network to provide the desired time or frequency response based on experience from network analysis.

Fundamental to the study of electromagnetic field theory are Maxwell's equations and the related electromagnetic wave equations used to describe the space-time relationships of electric and magnetic fields to their environment. These relationships are important in studying many areas including transmission lines, resonant electromagnetic structures, antennas, and the propagation of radio waves.

There are a number of electromagnetic devices used for communications with properties that are dependent on space-time relationships of electromagnetic fields. One such device which lends itself to illustration is a ring hybrid shown in Figure 1. In a ring hybrid, the two separate signal paths between ports 1 and 4 differ in signal transit time by one half period of the signal. Signals arriving at one of these two ports over the two paths from the other port will cancel and there is no coupling between ports 1 and 4. The same relationship applies to ports 2 and 3. However, a signal originating at port 1 will arrive at port 3 with equal transit times for the two paths and add in phase while signals on the two paths from port 1 will arrive at port 2 differing by exactly one signal period and will also add in phase. Therefore, there is no coupling between ports 1 and 4 except by virture of reflections in ports 2 and 3, but there is direct coupling between port 1 and ports 2 and 3. Clearly, at microwave frequencies these time relationships must be precise (picoseconds at SHF) for the

equipment to function properly. Many electromagnetic field devices depend upon precise time relationships such as this which are relatively easy to achieve and which are of great importance in communications engineering. Also, many electronic devices used in communications depend for their operation on the interaction of electrons and electromagnetic fields. These interactions in turn depend upon the space-time characteristics of both the electrons and the electromagnetic fields with which they interact.

Modulation is a process whereby a message signal is imposed on a carrier wave by varying one or more of the carrier wave's characteristics. In continuous modulation, the amplitude, phase, frequency or any combination of them can be varied. If phase or frequency is the characteristic which is varied by the message signal, this is a time related process. In pulse modulation the parameter varied by the message signal might be the pulse amplitude (PAM) or the pulse time (PTM). Pulse time modulation (PTM) is further subdivided into pulse width (or duration) modulation, pulse position modulation and pulse frequency modulation.

These examples provide some indication of the breadth of the application of time and time interval in communications. Of course it is far from complete, as the time relationships to antennas (phased arrays in particular), transmission lines, radio wave propagation, diversity transmission techniques, and many other important areas haven't been discussed.

Although the applications of time and time interval discussed above are directly related to the general field of communications, it might be desirable to discuss some broader systems considerations and those applications of recently growing importance. Two important areas of direct concern to communications systems are the frequency spectrum occupied by the modulated signals and the broad area of scheduling of message signals, which includes the important field of synchronization.

The Radio Frequency Spectrum

The radio frequency spectrum is a natural resource which although not expended or depleted by use is limited in its availability and can be wasted by unwise or inefficient use. New applications of the radio spectrum and rapid expansion of old applications can be expected to place increasing pressures on this limited resource.

Availability of precise time and time interval can aid in the efficient use of the radio spectrum. Consider, for example, that much of the military amplitude modulation voice communications equipment used in the 225 mHz to 400 mHz frequency band in the 1950s and 1960s had 100 kHz channel spacing, although 6 kHz or 8 kHz would have been sufficient for the modulation sidebands. The remainder of the allocated channel bandwidth accommodated frequency tolerances in transmitting and receiving equipments.

The application of single-sideband suppressed-carrier voice transmissions which require only half the radio frequency spectrum required for double sideband modulation, was technically and economically delayed because of the precision required of the carrier frequency generated at the receiver relative to the carrier suppressed at the transmitter. Although single-sideband modulation techniques have been widely used for frequency division multiplexing of telephone channels, and have been extensively used by radio amateurs for nearly two decades, many users of the congested high frequency radio bands have only recently begun to use them.

From these examples alone it seems clear that more precision in time and frequency have permitted improvement in the effective utilization of the radio frequency spectrum in the recent past. Further improvement is still needed and many possibilities for this improvement exist.

Synchronization

The most rapidly expanding application of PTTI in communications is synchronization. This is largely the natural result of a very rapid expansion of digital communications. Although this expansion of digital communications can be partially attributed to communications with digital computers, it is also partly due to advantages that digital transmission can provide for other communications service such as voice transmission. Digital transmission can provide signal-to-noise advantages for signals that must be relayed (repeated) over long distances because it permits regeneration of a nearly noise-free signal at each relay point, reducing the accumulation of noise. Digital transmission is also convenient when encryption is required for military and other applications.

Although synchronous communications are probably growing at the greatest rate in history, it is not a new concept. Perhaps the first truly synchronous communications system

was that operated by Ronalds in 1816 over a distance of 8 miles (1). In this system he installed clocks which rotated paper discs so as to expose one letter of the alphabet at a time through an aperture in a cover. When the clocks at the two ends of the communications system were synchronized, the same letter was visible at the two locations simultaneously. A spark initiated by an electrical connection at one location coincident with a specific exposed letter would occur and be observed at the other location coincident with the same exposed letter.

This, of course, is a close relative of the teleprinters so widely used during the last few decades. In these teleprinters, instead of one pulse per letter (or symbol), each character is composed of a 5-bit code group preceded by a start pulse and followed by a stop pulse. Presence or absence of individual pulses in the 5-bit code group can form 32 combinations to identify 32 different symbols. Because of the start-stop mode of operation it is only necessary to maintain the required synchronism during the transmission of a single symbol. Synchronism is automatically reestablished at the beginning of the next symbol. Obviously, the start-stop mode of transmission wastes considerable transmission capacity by transmitting both start and stop pulses with each symbol. Much of this capacity could be more usefully applied if a long string of equally spaced bits were transmitted with only occasional synchronizing pulses to permit synchronization of the receiver.

In digital communications it is desirable to maximize the ratio of the peak signal to rms noise for each bit (or symbol) so as to reduce the bit error rate. One method of doing this is by using a correlation detector in which the product of the received signal and a noise-free replica of each of the possible waveforms is integrated over a waveform period. If the possible waveforms are orthogonal, the resulting integration will maximize the signal contribution in the integration corresponding to the transmitted signal, while only the noise will contribute to the others. Obviously the receiver must know when to start and stop the integration process; i.e., it must be synchronized to the received signal.

The relatively straightforward process of transmitting binary digits over a point-to-point transmission link connecting a transmitter and a synchronous receiver has been commonly applied for several years. Its application is increasing and higher bit rates are being used. However, there are several other applications of digital

transmission which provide new dimensions to the application of PTTI.

Spread Spectrum

Consider the frequent requirement for resistance to interference, either deliberate or accidental, or consider the need for covert communications where it is desired to fulfill the communication requirement while minimizing the use of the communication signal for purposes of detecting and position-fixing the source of the signal. The same type of solution can be applied to both of these problems: Spread Spectrum communications (2). In a spread spectrum transmitter, the RF carrier is subjected to a double modulation process, one by the message signal and the other by a spectrum spreading sequence. The most widely used method of spectrum spreading has been phased shift keying by a high-speed sequence, where "high speed" means much faster than the baseband data rate. The sequences used for spread spectrum transmission are called pseudo-noise sequences because they possess properties like those of random sequences but are systematic and easy to generate. Another spread spectrum technique called frequency-hopping employs frequency shift keying to a large number of possible frequencies.

When either of these techniques are used, a correlator in the receiver performs the inverse process of that performed by the spread spectrum modulator. For each phase reversal or frequency shift applied at the spread spectrum modulator, a corresponding complementary phase reversal or frequency shift is applied at the correlator when the signal arrives there. This returns the message modulated carrier to its original bandwidth while at the same time spreading the interference (the action of the correlator) in the same manner that the message modulated carrier was spread at the transmitter.

Quite obviously, timing is an essential requirement. The replica of the pseudo-noise waveform generated at the receiver must be accurately synchronized to that of the arriving signal in order to recover the message modulated carrier. A major problem is to initially bring the receiver timing to within a fraction of a pseudo-noise code element of the received signal. One method of doing this is to slew the receiver timing across the time uncertainty interval until the signal power is observed in the message demodulator. The desirability of minimizing the time uncertainty between the transmitter and the receiver is

quite obvious. This is particularly true when synchronization must be acquired during severe interference or intentional jamming.

Time Division Multiplexing

We can expect that some time in the future a switched digital communications network will connect many remote parts of the world and that such a network will employ time division multiplexing and/or time division switching. Figure 2 illustrates, in analog form, a time division multiplexer in which bits arriving on four separate channels at the left are interleaved into a single bit stream on the right. Each bit in each stream entering from the left must arrive at exactly the moment that it is needed to fill its assigned time slot in the multiplexed bit stream. Because of variations in transmission delays (transit time) and differences in clocks at different nodes, the probability of each bit arriving from another node at exactly the moment when it is needed is very small. In a practical application, provision must be made to be sure that the bits will be available at the moment they are needed.

Figure 3 illustrates a method of accommodating the variations in time of arrival of bits from other nodes. Storage buffers in each incoming data stream act as reservoirs in which the bits are temporarily stored. The nodal clock removes them from storage at exactly the right moment for them to fill their assigned time slot in the multiplexed bit stream. However, the clocks at the other nodes must be coordinated well enough with the local clock to assure that the buffers will neither overflow nor empty. Note that in a switched network the channels to be multiplexed at any specific multiplexer can originate anywhere in the network so that all nodal clocks are involved.

Many methods of providing the required coordination of the network clocks have been proposed, and some are in use (3). They include precise independent clocks, master-slave, external time reference, mutual synchronization, and time reference distribution.

In the independent clocks technique there is no timing communication between nodes. Each node has its own precise frequency clock. Since these clocks have slightly different frequencies, timing errors accumulate and it is necessary to occasionally interrupt traffic to reset the storage buffers.

The master-slave technique is perhaps the most obvious and straightforward. In this technique all nodes are slaved either directly or indirectly to a single master clock by phase locking the local clock to a received bit stream.

In the external time reference technique each node receives its time reference from a source external to the network, such as a Loran-C navigation signal, so that all nodal clocks are set to the same time within some tolerance.

In the mutual technique, each node adjusts the frequency of the local clock in such a way as to minimize the phase difference between itself and some weighted average of the phases of the received signals.

In the time reference distribution technique, all nodes are kept within a specified time tolerance of the master node (4). Nodal clocks run independently most of the time but are occasionally updated. Time reference information is transferred between all connected nodes with the effects of transmission time removed, but the time reference used at any node is that which comes over the best path to the highest ranking node. At each node, a simple set of rules is applied to information received from adjacent nodes so as to assure the selection of the best path to the highest ranking surviving node (5). The effects of signal transit time on time reference transfers over high capacity duplex digital transmission links can be removed by a simple procedure (4, 6) (see appendix).

One suggested method of providing the required clock coordination in a large digital communications network extending over a major part of the earth uses several of these basic techniques, each where it is best suited to the needs of the system, in a network referenced to Coordinated Universal Time (UTC) (6). It is illustrated in Figure 4. In this system, the highest level of the timing hierarchy comprises the satellite terminals because satellite links have superior capability for making precise time transfers over very long distances. Time reference distribution is used for the major nodes (any node connected to more than two other nodes). Minor nodes and PBXs have their nodal clocks slaved either directly or indirectly to the major nodes by phase locking them to received signals. Since the entire network is referenced to UTC, if some major node should have trouble getting a time reference via the normal time reference distribution, a Loran-C receiver or some other external UTC reference could be used temporarily. As a last resort backup, all nodes are provided with the

capability to operate in the independent clock mode, in which traffic must occasionally be interrupted to reset the buffers in order to prevent them from either overflowing or emptying. This provides a very highly redundant and dependable system in addition to a number of advantages resulting from having an accurate time available at all nodes (see appendix).

Time Division Switching

A time division switch is a device which interchanges communications time slots for the purpose of performing the switching function (7). This is illustrated in Figure 5. The time division switch has the capability of connecting an incoming channel in any time slot on any received digital transmission link to an outgoing channel in any time slot on any transmitted digital transmission link. In Figure 5, the channel α of time slot 1 of the received signal A_R appears in time slot 1 of the transmitted signal B_T while the channel β of time slot 2 in the received signal B_R appears in time slot 3 of the transmitted signal A_T. In effect, the time division switch performs both multiplexing and switching functions. In a switched digital network, the time division switch has timing requirements similar to those of time division multiplexers in a synchronous network with space division switches.

Communications Satellites

Communications satellites are becoming increasingly important in the field of communications. For various reasons, including cost, it is desirable to serve a large number of users from each communications satellite. Because of the complexity that would be required to provide separate transponders for each pair of users, it is desirable to provide a large number of accesses per satellite transponder. Although there is some overlap and hybrid systems are possible, there are four basic categories of multiple access (8).

Frequency Division Multiple Access (FDMA) is characterized by allocating an orthogonal frequency channel to each access. It is the least dependent on PTTI techniques of all multiple access techniques, but it is difficult to maintain orthogonality through the transponder for a large number of channels while efficiently using the transponder power.

Time Division Multiple Access (TDMA) allots separate time

slots to each user. With proper network timing (PTTI application), it is a truly orthogonal system (because one user at a time has exclusive use of the transponder) which is energy efficient, bandwidth efficient, readily achievable and is relatively insensitive to transponder characteristics. Although it is vulnerable to selective jamming and requires storage buffers, TDMA appears to be one of the most attractive methods of multiple access.

Spread Spectrum Multiple Access (SSMA) is a coded multiplexing technique. Although orthogonal codes could be used to achieve orthogonal channels, quasi-orthogonal codes are attractive to remove the requirement for precise network timing and control. Of course, even with quasi-orthogonal operation, each receiver must be accurately synchronized to the received code for its particular channel, and the other quasi-orthogonal users will appear as independent additive noise. For quasi-orthogonal operation SSMA requires no central network timing and has inherent antijam capability with a large number of possible addresses, but its energy efficiency and its bandwidth efficiency are poor and it requires up-link power coordination.

Pulse Address Multiple Access (PAMA) like SSMA allots separate codes to each user, but it also uses on-off amplitude modulation in addition to phase or frequency coding. Although it has inherent antijam capability and does not require network timing (only synchronization of the receiver to the code of the desired received signal), it has low multiple access efficiency in a nonjamming environment using a hard limiting transponder.

The time division multiple access technique appears to be one of the most attractive for digital transmission and is illustrated in Figure 6 where three ground terminals transmit to a single transponder in the satellite. The signal from each ground terminal is correctly timed so that it will arrive at the satellite at the correct moment to fill its time slot. Signals received at the transponder are therefore retransmitted with correct interleaving in a single signal which is received by all ground terminals.

Some Concluding Observations

Although applications of PTTI pervade the entire field of electrical communications, the most rapidly expanding application is for synchronization. This results from the rapidly expanding use of digital communications. To date,

most applications of PTTI for synchronization of digital communications have been for individual node to node digital transmission links or for individual channels transmitted over analog transmission facilities employing modems at each terminal. In both of these applications, the signal to be synchronized consists of relatively short (in numbers of bits) periodic time frames and there is no digital multiplexing of signals from different sources. It is relatively simple to phase lock the receiver to the repetitive frame code of the received signal because the total timing uncertainty can never exceed the length of a frame.

In order to preserve desirable characteristics of spread spectrum transmission, it is undesirable to use codes with a short repetition period so that codes with very long periods are used. This long frame period places no effective limit on the size of the time uncertainty so that it is desirable to limit it by other means, such as accurate clocks.

With complex switched digital networks employing time division multiplexing, not only must receivers be synchronized with the received signals, but all remotely located originators of digital channels that must be capable of being time division multiplexed with one another somewhere in the network must be adequately synchronized with one another.

With communications satellites employing time division multiple access, not only must the ground terminal receivers be synchronized with the received signals, but the arrival of the signals received at the satellite from different ground terminals must be synchronized so as to not overlap and interfere with one another.

All of these synchronization problems could either be solved or greatly alleviated if an accurate standard time, e.g. UTC, was available wherever it was needed. For some applications, such as low frequency radio communications, the availability of such an accurate standard time will permit communications to be prearranged on an accurate schedule that will reduce or eliminate the message exchange used only to establish communications. At extremely low radio frequencies, not only could the accurate time be used to predetermine the time of occurrence of a bit, but it could also be used to determine the phase of the received signal.

An application where availability of a standard time such as UTC would be very advantageous would be at all major nodes

of a large, complex, switched digital communications network consisting of many nodes covering a large geographical area and interconnected by high capacity duplex transmission links. It is interesting to observe that such a network also has the desirable combination of characteristics by which it could efficiently distribute the standard time reference, e.g. UTC, to where it is needed.

The use of such a standard time in communications applications can have the same advantages as standardization in any application. It will reduce interfacing problems, provide a common basis for measurement and permit the use of alternate sources. The use of the same time standard for all digital communications systems would make it convenient to temporarily combine independent communications operations into networks for their mutual support whenever desirable. In addition, the actual process of distributing a time reference through a highly connected digital communications network can be a useful tool for self-monitoring, and other similar advantages are conceivable. The use of the same time standard, (UTC) for all communications and navigation systems would enable them to provide backup to one another in the timing function. Because of advantages such as these, the relationship between the utility of a standard time (UTC) at all major nodes of a switched digital communications network, the unique capability of such a network to distribute the time standard to these nodes, and the likelihood that new applications for this accurate time reference will arise once it is available, should be given careful consideration.

Appendix

In the suggested integrated timing system for time division multiplexed switched digital networks (6), several basic timing techniques including external time references, time reference distribution, slaving, and independent clocks are all used in the same network, which is referenced to Coordinated Universal Time (UTC). This system employs time reference distribution (4) among the major nodes of the network to keep clocks at each node very close to the time of the master which is referenced to UTC. Minor nodes are slaved either directly or indirectly to the major nodes by phase locking their clocks to received signals. Since the network is referenced to UTC an external UTC reference can be used for a backup anywhere in the network. The independent clock mode of operation can serve as a last resort backup, but its use will require occasional interruption of traffic to reset buffers. There are three major functions related to time reference distribution among the major nodes of the network: measurement of the local clock's time error, correction of the time error in the local clock, and selection of the paths over which the time reference will be distributed from the master (ultimate reference) through the network, including selection of a new master when necessary.

Digital transmission normally uses a framing code to allow the receivers to be accurately synchronized to the received signals. These frame synchronization codes can be initiated by the nodal clock at each transmitter, their time of arrival can be measured by the nodal clock at each receiver. Neglecting noise, the measured time difference between the received synchronization code and the nodal clock at the receiver is due to two sources: the transit time of the signal, and the time difference between the two clocks. Let T_A be the time of the clock at node A, T_B be the time of the clock at node B, D_{AB} be the signal transit time from node A to node B, and D_{BA} the signal transit time from node B to node A. Then, the time difference measured at node A between the synchronization code received from node B and the local clock at node A is given by equation (1A).

$$K_A = T_A - (T_B - D_{BA}) \qquad (1A)$$

The time difference measured at node B is given by equation (2A).

$$K_B = T_B - (T_A - D_{AB}) \tag{2A}$$

Node A transmits the measurement K_A to node B, and node B transmits the measurement K_B to node A. Subtracting K_A from K_B and dividing by 2 gives equation (3A).

$$T_B - T_A = \frac{K_B - K_A}{2} + \frac{D_{BA} - D_{AB}}{2} \tag{3A}$$

When the transit times in the two directions are the same ($D_{BA} = D_{AB}$), they cancel, giving the time difference between the two nodal clocks with the transmission transit times removed. Normally, for high capacity transmission links, the difference in transit time in the two directions will be very small and the last term of (3A) can be neglected.

Although this discussion has assumed that the framing code is used for time comparison, under some circumstances it might be preferable to use a low-level spread spectrum signal superimposed on the transmitted data signal.

After the time difference between clocks at two adjacent nodes has been measured, it might seem natural that the node taking a time reference from the other node would immediately correct its clock for the benefit of other nodes which use its clock as a reference; but the resulting disturbance might be undesirable. It seems preferable to place a limit on the maximum rate of clock correction, such as one nanosecond per second (except during the initial setting). In order to provide an accurate reference for each node farther along a tandem string, each node transmits to its neighbors its measured but uncorrected error. When this information is combined with the measured time difference between nodal clocks, an accurate time reference is provided. This makes it possible for the correction of the nodal clocks to be relatively independent from the accurate distribution of time.

Two types of information transmitted by each major node to its neighbors have already been mentioned. By assigning a unique rank to each clock in the network and adding some additional types of information that are transmitted by each node to its neighbors, a simple set of rules can be used at each node to select its time reference from the neighboring node that will provide the best timing path to the highest ranking node in the network. Such a

systematic approach for selecting slaving paths in a master-slave network was described by Darwin and Prim (5).

It might be desirable for each node to transmit six types of data to its neighbors. These are:

T1. The time difference between the local clock and the clock at the other end of the link as observed at the local clock (This time difference includes transit time).

T2. The measured but uncorrected error in the local clock relative to its ultimate master reference.

T3. The rank of the node used as the ultimate master reference for the local clock.

T4. The merit (demerit rating) of the transmission path over which the time reference information is passed from the ultimate reference clock to the local clock.

T5. The rank of the local clock. (It is necessary to transmit this information because a node may have more than one clock with significantly different ranks.)

T6. Delay interval information. (This is information that can be used by the node to determine how long it must wait after tentatively selecting a new neighboring node as immediate reference before it may actually start using it as a reference for its own clock.)

The first two types of information are used to provide time reference information over every transmission link connecting major nodes (6). This provides a high degree of redundancy (with the resulting reliability and survivability). The rest of the information is used at each node to select a time reference from the neighboring node that will provide the best time reference path to the highest ranking node. The rules used at each node are:

Rule 1. A node initially entering the network will temporarily reference its own clock until a better selection is made.

Rule 2. Whenever the link or neighboring node used for immediate time reference fails, the node will temporarily reference its own clock until an alternate selection is made.

Rule 3. If a neighboring node being used as the immediate

reference should have a change in its ultimate reference to one of a lower rank, the local node will temporarily reference its own clock until an alternate selection (which could be the same one again) is made.

Rule 4. The third of the six types of data above, as received, provides the rank of the master time reference used by each connected node. The time reference for the local clock is taken from the connected node which uses the highest ranking clock as its ultimate master time reference. However, if the local clock outranks the others, the local clock (perhaps employing an external UTC reference if available) is used as reference. If any two links come from nodes ultimately referencing the same highest ranking clock, the criterion is inconclusive and rule 5 must be applied.

Rule 5. The fourth type of data above provides information about the merit (actually demerit) rating of the path from each connected node to the ultimate master time reference. Combining this information with the known merit (demerit) of the path from the local node to the connected node gives the overall merit (demerit) rating for paths to the master reference through each link entering the node. When the test of rule 1 is inconclusive because more than one of the immediate time references come from nodes ultimately referencing the same highest ranking clock, use this fourth type of data to select from among them the time reference that comes over the transmission path with the highest merit, i.e., the one with the best time transfer capability. If two or more of these come over paths with the same highest merit rating, this test will also be inconclusive and rule 6 must be applied.

Rule 6. The fifth type of data above provides the rank of the clock at each neighboring, i.e., directly connected, node. When the tests of rules 4 and 5 are both inconclusive, this fifth type of data is used to select from among those links with ultimate time reference coming from the same highest ranking clock, over paths with the same highest merit rating, that one which comes from the highest ranking, directly connected node. This produces an unambiguous decision.

Rule 7. If no time reference is available, the node will divert to the free-running clock mode (referencing its own accurate independent clock). When operating in this mode, data storage buffers at this and neighboring nodes will have to reset occasionally to accommodate the slight

frequency error that will exist at the local node.

When a node must revert to its own clock due to a failure, as required by rules 2 and 3, there probably will still be obsolete information in the network, i.e., some nodes will be indicating that they are referencing the node that is failed. This results because of the length of time required for the information to disseminate to all nodes that were using the failed node. The information only progresses one node farther from the failed node for each information exchange period. The sixth type of information above is used to assure that this obsolete information has had time to have been swept from a newly selected immediate (neighboring node) reference before a node is permitted to reference it.

References

(1) William R. Bennett and James R. Davey, Data Transmission, McGraw-Hill Book Company, 1965.

(2) Naval Electronics Laboratory Center, TD 271, AD-915852, "Proceedings of the 1973 Symposium on Spread Spectrum Communications, Volume I," M. L. Schiff, March 1973.

(3) J. W. Pan, "Synchronizing and Multiplexing in a Digital Communications Network," Proc. IEEE, Vol. 60, No. 5, (May 1976) pp. 594-601.

(4) H. A. Stover, "A Time Reference Distribution Concept for a Time Division Communication Network," Proceedings of Fifth Annual NASA Department of Defense Precise Time and Time Interval (PTTI) Planning Meeting, NASA, Goddard Space Flight Center, Greenbelt, Maryland (December 4-6, 1973).

(5) G. P. Darwin and R. C. Prim, U.S. Patent No. 2,986,723, "Synchronization of a System of Interconnected Units."

(6) Harris A. Stover, "Coordinated Universal Time as a Timing Basis for a Digital Communications Network," EASCON 1974 Record, Washington, DC, October 7, 8, and 9, 1974.

(7) Patric Marino, T. H. Gordon, R. J. Pilc, "A Time-Division Switch," IEEE Transactions on Communications, Vol. COM-22, No. 11, November 1974.

(8) D. T. Magill, "Multiple-Access Modulation Techniques," AIAA Communications Satellite Systems Conference," Washington, DC, May 2-4, 1966.

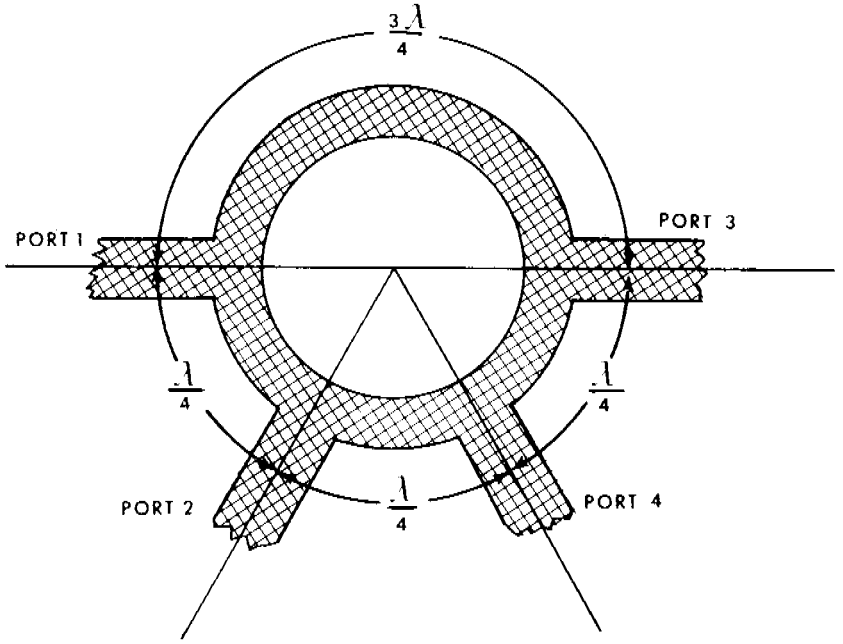

Fig. 1--Ring Hybrid

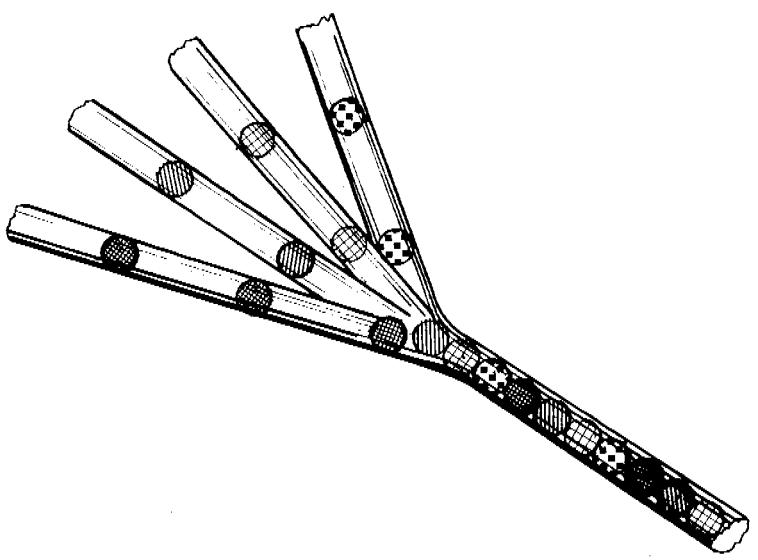

Fig. 2--Analog of Time Division Multiplexer

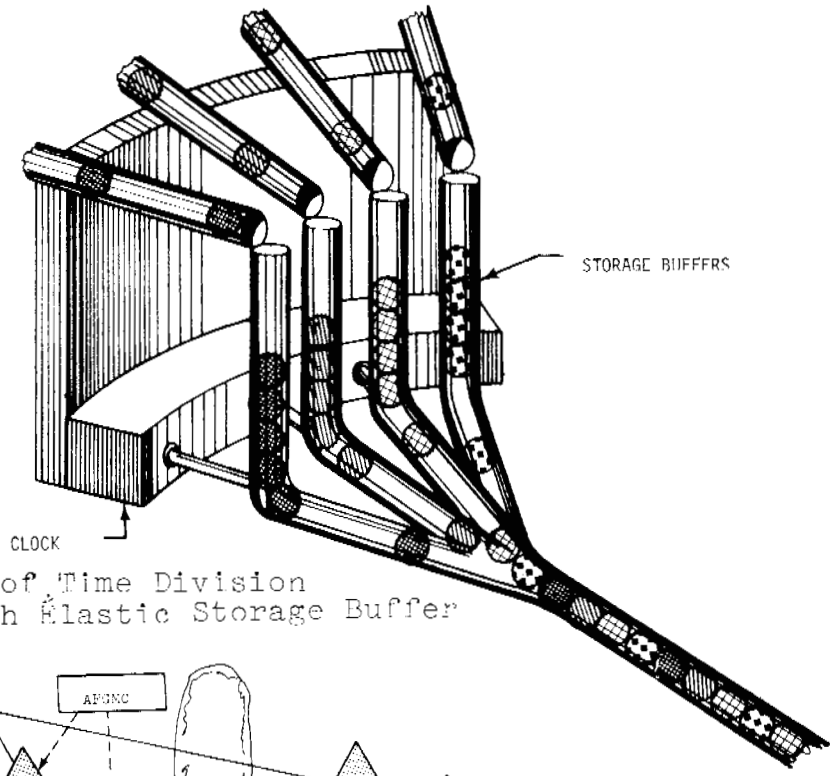

Fig. 3--Analog of Time Division Multiplexer with Elastic Storage Buffer

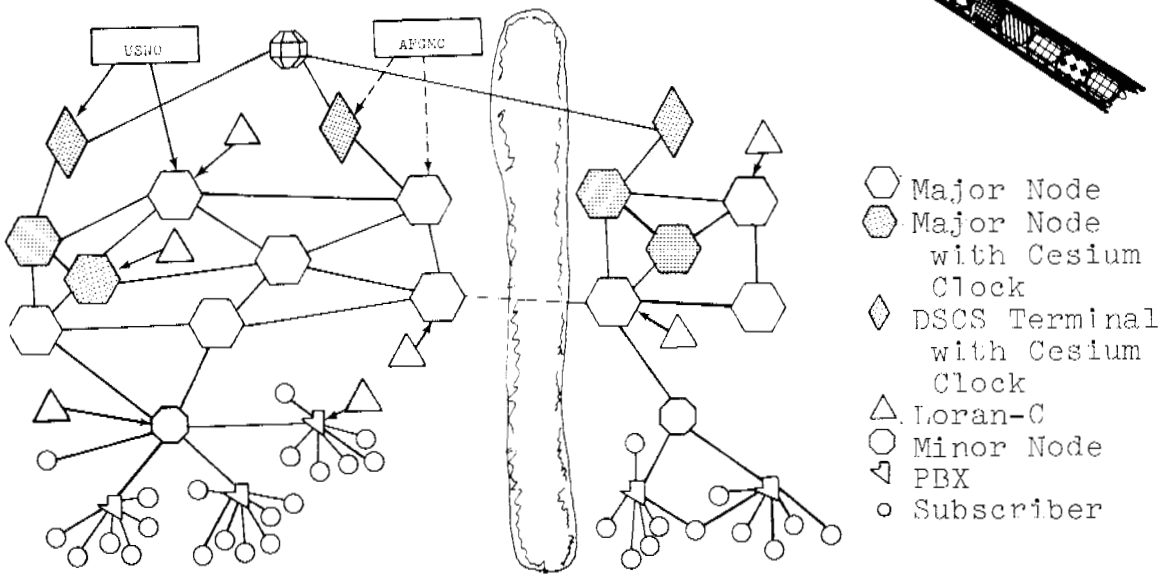

Active master node uses UTC reference from U.S. Naval Observatory (USNO), Air Force Guidance and Metrology Center (AFGMC), or Loran-C. Major nodes use Time Reference Distribution or option for external time reference (Loran-C). Minor nodes, PBXs, and subscribers slaved to received signals. All nodes capable of independent clock mode of operation.

Fig. 4--Suggested Timing System for Digital Communications Network

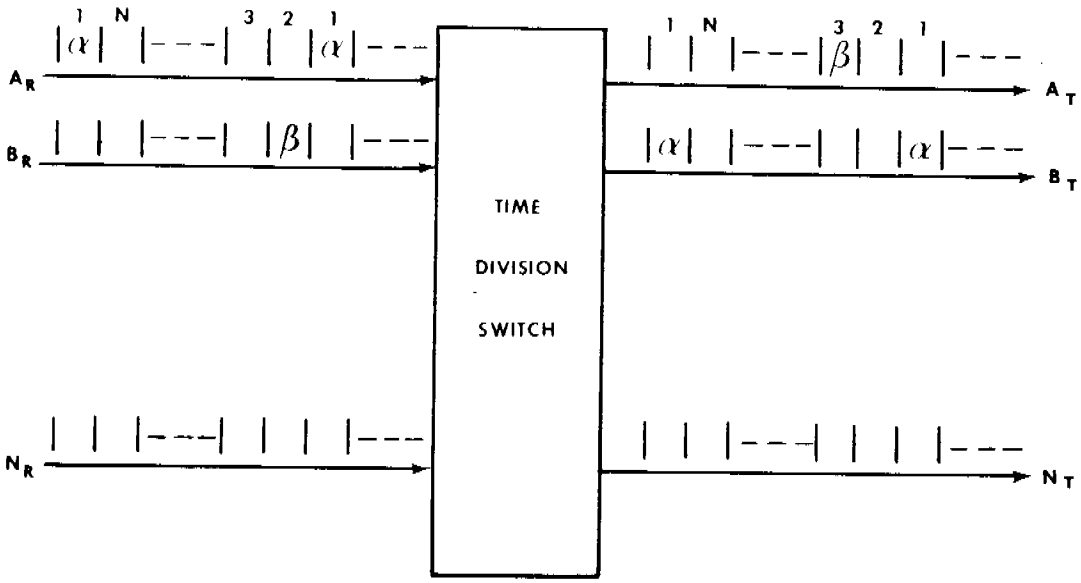

Fig. 5--Time Slot Interchange for Time Division Switching

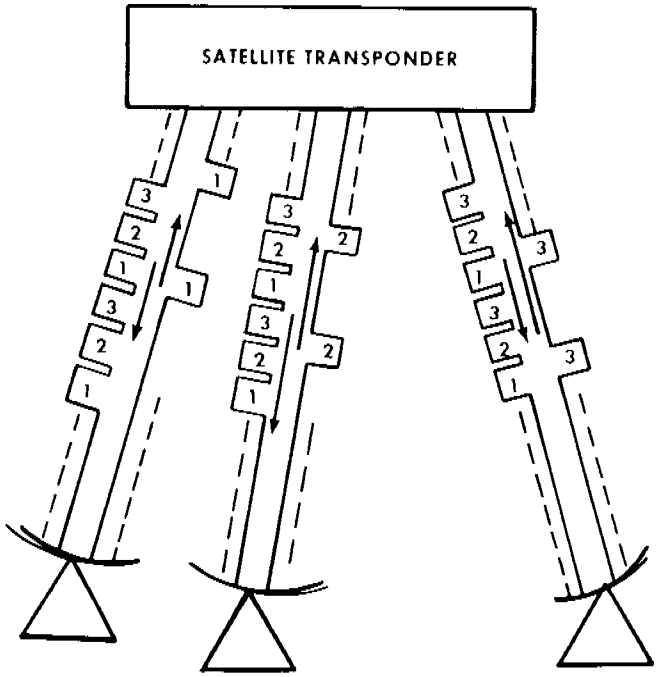

Fig. 6--Time Division Multiple Access

QUESTION AND ANSWER PERIOD

NO DISCUSSION