NASA TRACKING SHIP NAVIGATION SYSTEMS

John J. McKenna
NASA/Goddard Space Flight Center

ABSTRACT

The Ship Position and Attitude Measurement System that is installed aboard Goddard Space Flight Center's tracking ship VANGUARD will be described. An overview of the entire system will be given along with a description of how precise time and frequency is utilized. The instrumentation will be broken down into its basic components. Particular emphasis will be given to the inertial navigation system. What it is, how it works, and the requirement for precise time will be described. Each navigation system used, a Marine Star Tracker, Navigation Satellite System, Loran C and OMEGA in conjunction with the inertial system will be described. The accuracy of each system will be compared along with their limitations.

INTRODUCTION

Ladies and Gentlemen, I have come before you today for the purpose of introducing you to the Ships Position and Attitude Measurement System (SPAMS). This system is used on NASA's Tracking ship VANGUARD. Its function is to provide on a continuous basis attitude data (roll, pitch, and heading), velocity data (velocity North, velocity East and total velocity), and position (latitude and longitude) to the Ship's Central Data Processor where it is used for directing the tracking antennas.

During the Apollo program, the assumption was made that the only source of error in the data was due to the ship's position. Requirements were placed on the VANGUARD instrumentation such that the overall accuracy (i.e., error budget for both Navigation and Tracking antennae) would appear to be no more than 0.75 nautical miles in position and angle data would appear to be no more than 0.4 mils (0.023 degrees). Therefore, the error budget for the SPAMS with respect to its navigation and attitude data must be well within the overall accuracy assigned to the ship's instrumentation.

Before discussing the SPAMS, a few definitions are needed. The geoid is the figure of the earth as defined by the undistrubed surface of the waters of the oceans over the entire surface of the earth. Because the direction of gravity is not everywhere perpendicular, the geoid is not quite an ellipsoid of revolution. Most navigation systems relate to a model of the earth that is defined by an ellipsoid of revolution (spheroid). On that ellipoid is then imposed a grid that we call Latitude and Longitude. There are a number of definitions for latitude

1) Terrestrial latitude is the angular distance from the equator measured northward or southward through 90°.

2) Astronomical latitude is the angular distance between the direction of gravity and the plane of the equator and,

3) Geodetic latitude is the angular distance between the plane of the equator and a normal to the spheroid.

Longitude has similar definitions but is measured from an adopted reference point or prime meridian and is measured eastward or westward through 180°.

Dead reckoning or deduced position is the determination of position by advancing a previous position for courses and distances.

INTEGRATED NAVIGATION SYSTEM

Figure 1 shows that the Integrated Navigation System (INS) is really made up of two systems; a Marine Star Tracker (MST) and Ships Inertial Navigation System (SINS). Figure 2 shows photographs of each component in the system. The binnacle contains the inertial platform on which four gyros and three PIPA's are located.

The SINS is a dead reckoning system and is composed of an inertial platform which is stabilized by three (3) single-degree-of-freedom gyros; three accelerometers, which sense acceleration in the level (x and y) and vertical (z) directions; a gimbaling system to isolate platform motion from ship's motion, and associated electronics and hardware (torquer motors, servos, pickoff sensors, etc.). Also contained, as part of the MK3 Mod 5 SINS, is a monitor system composed of a fourth gyro and accelerometer which are mounted on a separate platform. This separate platform, with monitor gyro and monitor accelerometer, is mounted on the main (inertial) platform, and it has freedom of motion in the level (x-y) and (z) direction plane. The monitor system provides the capability for internal calibration of the gyros and accelerometers. Fig. 3.

The SINS is an analog/digital computer. Besides a timing input it requires a damping signal which is provided by a Electro Magnetic (EM) log, an azimuth reference, and position fix information that is provided by a Marine Star Tracker, Navigation Satellite System, LORAN-C, and OMEGA.

Here we must speak of Navigation. Dutton defines Navigation as the art or science of determining a ship's or aircraft's position at any time and of conducting a ship or aircraft from one postion to another Science is involved in developing the instrumentation to accomplish this purpose. The application, the interpretation of information received, and its analysis constitute an art requiring both skill and experience.

No one Aid to Navigation or combination of such Aid's provides all the information to give a perfect fix, that is an exact Latitude and Longitude. Each Aid to Navigation has unique advantages and disadvantages which must be considered by the user. It is then possible to make a reasonable estimate of one's Latitude and Longitude. Even then results differ depending on which ellipsoid is used as the reference ellipsoid.

The primary mode of navigation for the Integrated Navigation System is the Stellar-Inertial mode. In this mode up to six preselected stars can be tracked by the Marine Star Tracker. This instrument is an electronic sextant. It measures observed elevation and azimuth angle to the selected stars and transmits this data to the MINDAC computer where in conjunction with precise time, star ephermis and besselian day number, a position fix is calculated at six minute intervals. The period of one complete circuit of the fictitious mean sun in right ascension beginning at the instant when the right ascension is 18H 40M is known as the Besselian solar year. This position fix provides Latitude, Longitude and a reference azimuth which can be either automatically inserted into the Sperry Kalman Optimal Reset (SKOR) filter at six minute intervals or manual control can be affected at the operator's discretion. Fig 4.

Unlike normal celestial navigation where a good horizon available during twilight periods (or a bubble Sextent) is required to obtain a fix using the stars, the Marine Star Tracker can be used day or night. It has an accuracy under ideal conditions for a single fix in the neighborhood of 0.05 NM.

The limitations on its accuracy are many. First, it is not possible to track when it is overcast, second refraction and other parameters are not always constant, third there are system calibration errors, and fourth there is an error due to a deflection of the vertical. The deflection of vertical is the difference between the actual geoid and

the reference ellipsoid.

NAVIGATION SATELLITE SYSTEM

The Navigation Satellite System utilizes knowledge of the position and velocity of a satellite to obtain a geographic fix. The orbit parameters or ephemeris of the satellite are transmitted by the satellite. The range from the observer to the satellite is determined by measuring the doppler frequency shift in the transmitted radio signals. This doppler frequency shift is dependent upon the transmitted frequency, position and velocity of the satellite, and position and velocity of the observer. The time reference and satellite ephermeris are transmitted from the satellite at two minute intervals. Fig. 5.

To obtain a fix, an observer assumes a set of positions for the two minute intervals at which doppler frequencies were recorded. From these positions and orbit data he computes set of doppler frequencies. The computed doppler frequencies are then compared to the observed doppler frequencies on an iterative basis to obtain a best fit. When this fit is obtained a fix is generated. Fig. 6.

The accuracy of this system is dependent on

a) the geometry of the pass

b) accuracy to which the satellite orbit is known

c) accuracy to which the doppler frequency can be determined

d) accuracy of the computational methods utilized.

The degree to which doppler frequency measurement changes in an observer's position is a function of the observer's position relative to the satellite orbit. An observer in the satellite orbit plane sees no velocity normal to the orbit plane; therefore, the longitude of the fix is very poor. Similarly the satellite-observer velocity change is very small when on the horizon of the observer. For best results the observer to satellite elevation should be greater than 15 degrees and less than 45 degrees; however, satisfactory results can be obtained at elevations of 70 degrees.

Orbit parameter predictions are transmitted from the satellite's memory on a continuous basis at even two minute intervals. The information contained in the satellite's memory is inserted at periodic

intervals with updated orbit parameter predictions by a ground station. Any errors in these computations and any perturbations in the satellite orbit will be reflected as an error in the fix that is determined by the observer.

In addition to the orbit parameter predictions there are uncertainties in doppler frequency measurements which result in errors in the fix. There are refraction effects, frequency variation, and observer velocity prediction errors.

Ionospheric refraction effects cause a path length distortion of the radio signal transmitted from the satellite. To reduce this error the Navy Navigation Satellite System utilizes a two frequency satellite transmission and a linear approximation of the frequency-refraction relationship as a correction to the doppler frequency measurement. Fig. 7.

The navigation satellite system is a doppler frequency measurement system. An instability in the reference frequency will cause an error in the position fix. On the VANGUARD, the AN/SRN-9 Navigation Satellite Systems are directly interfaced with the instrumentation timing system which has greater long and short term stability than those freqency standards normally supplied with navigation satellite receivers.

To reduce error in time measurement the satellite transmits a time signal with an accuracy of approximately 50 us as part of its data transmission. The observer receives the signal, corrects it for propagation and then can use it to correct the ship's clock.

During a satellite pass, an error in the observer's velocity and the effects of wind and current will result in a error in the position fix. To minimize this error source the VANGUARD uses the inertial system which is independent of the effects of wind and current. At least half of the total error can be attributed to this source.

There are other sources of error such as noise, altitude of observer and signal propagation. These are negligible in effect and will not be discussed.

There are many opinions as to the accuracy of this system. On the VANGUARD where an inertial system is used to correct for the observer's velocity, individual satellite fixes of 0.05 to 0.1 nautical when compared to LORAC have been obtained. LORAC is a high accuracy short-range hyperbolic navication system that is used for test purposes. The inertial system's SKOR (Sperry-Kalman Optimal Reset) routine serves as a filter to either eliminate or compensate for satellite fixes which do not conform to the historical movement of the vessel. Without

an inertial system or Loran 'C' to dead reckon during a pass, the velocity error and the effects of wind and current will degrade system accuracy. When a gyro compass and log are utilized for dead reckoning during a pass only 0.5 to 1 nautical mile accuracy can be expected.

The primary disadvantages of this system are the fix period, the reliance on pass geometry for accurate fixes, and the requirement for accurate dead reckoning during a pass. The fix period is such that only an average of ten usable satellite passes can be obtained during a twenty four hour period. Some of these usable passes are not of optimum altitude for maximum accuracy, that, between 20° and 45° from the horizon.

LORAN C and OMEGA

The next systems to be described are Loran "C" and OMEGA. They are similar only in that they are radio navigation aids and that they can be utilized either in the hyperbolic or in the rho rho (range) mode of operation. When applied to tracking ship navigation, they can be very useful aids. Unfortunately due to a lack of data reduction capability, the VANGUARD makes only limited use of them. Therefore, I shall describe how these systems could and should be used to determine the geographic position of the ship and for monitoring the operation of the inertial navigation system.

While not as accurate in determining position as either the Marine Star Tracker or the Navigation Satellite System, they have two (2) useful characteristics viz.. they provide fixes on a continuous basis and the fixes are repeatable. In the case of Loran "C" this repeatability is to within fifty (50) feet. While OMEGA does not exhibit the same repeatability as Loran "C" it does provide a significant improvement in the determination of the ship's geographic position. By correlation of the repeatability characteristics of Loran "C" and OMEGA with the accuracy of the Marine Star Tracker and Navigation Satellite System it should be possible to achieve, within the groundwave range of a Loran "C" chain the determination of the ship's geographic position to an accuracy of less than 0.05 nautical miles, and while in an OMEGA environment an accuracy to within 0.25 nautical miles. The inertial system monitoring provided by these systems makes it possible to detect such problems as gimbal servo oscillations or Schuler loop oscillations.

Loran "C" is a pulsed hyperbolic radionavigation system that operates in the frequency range 90 to 110 kilo-hertz. The United States Coast

Guard is responsible for the operation of the Loran "C" chains. That agency plans to expand the present coverage so that the entire U.S. Coastal Confluence Zone out to two hundred (200) nautical miles is covered with an accuracy of 0.25 nautical miles.

The Loran 'C' derives its accuracy from the time difference measurements of the pulsed signals and the inherent stability of low frequency propagation. Hyperbolic navigation systems operate on the principle that the difference in distance from the point of observation to each of the stations. The locus of all points having the same observed difference in distance to a pair of stations is a hyperbola, called a line of position (LOP). The intersection of two (2) or more LOP's defines the position of the observer. Figure 8.

A Loran "C" chain consists of a master transmitting station and two (2) or more secondary or slave transmitting stations. These stations are located in geographic positions so that the master and two (2) secondary stations can be received throughout the desired coverage area. The transmitting stations transmit groups of pulses at a specific group repetition intervals (GRI). The pulse has the shape indicated in Figure 9 and is transmitted on a 100 KHz carrier.

A minimum GRI is selected of sufficient length so that it contains time for transmission of the pulse group from each station plus time between each pulse group so that signals from two (2) or more stations cannot overlap in time anywhere in the coverage area. Thus with respect to time of arrival of the master, a secondary station will delay its own transmission for a specified time called the secondary coding delay.

Skywaves are echoes of the transmitted pulses which are reflected from the ionosphere. These skywaves may arrive at the receiver between 35 us to 1000 us after the groundwave thus overlapping either its own groundwave or the groundwave of the succeeding pulse. To eliminate the problems of the early arriving skywave the time measurement is made on the first part of the pulse. To eliminate the problem of the late arriving skywave the phase of the 100 KHz carrier is changed in each pulse group in accordance with a predetermined pattern.

Like all navigation systems the Loran "C" system is subject to errors. The sources of error include the following:

a) Receiver limitations due to noise and interference.

b) Short-term inconsistency of the propagating medium.

c) Synchronization of the transmitted signals.

d) Error in location of the transmitting antenna.

e) Propagation effects due to ground conductivities (Secondary Phase).

f) Velocity changes of the signal.

g) Distortion of the grid due to ground anomalies.

h) Wave-front distortion with altitude.

Continuous calibration of the time difference for each master-secondary pair is provided by the Coast Guard by the maintenance of a system area monitor. Cesium frequency standards are used at each transmitting station.

The OMEGA navigation system is a world wide hyperbolic navigation system. It can also be operated in the rho-rho mode, where in conjunction with a precise and stable internal oscillator, accurate distance measurements to the transmitter can be made.

Navigation by the OMEGA system depends on the phase stability of VLF signal propagation and the ability to predict the phase difference at any time of day.

The OMEGA navigation system is similar to LORAN "C" only in that they are both hyperbolic radio navigation systems. To cover the globe a total of eight (8) transmitter stations are planned. Of the eight (8), five (5) are operational. Two (2) are either under construction or testing. A specific geographic location has not been selected for the last station. Fig. 10.

The eight (8) stations are designed to transmit in a time-multiplexed sequence in the Very Low Frequency (VLF) range of 10 to 14 kilohertz over a 10 second period. The frequencies used are 10.2 KHz, 11 1/3 KHz and 13.6 KHz. The stations are phase locked to a common standard of time to the order of a few parts in 10^{12}. Therefore, the signal field phase is stationary at any measureable point. The relative phase angle between any two transmitters is dependent upon the distance between the receiver and the transmitter. The same phase angle is observed at all points that have the same difference in distance from the transmitting stations. The locus of all such points is a contour of constant phase (isophase) fixed on the surface with respect to the transmitters. These isophase contours represent a family of hyperbolic lanes. A single line of position (LOP) is defined by a pair of stations. A second line of position (LOP) is required to

determine a fix. Fig. 11.

In rho-rho operations, the phase of the received signal is compared to phase generated by the observors cesium frequency standard. Only two (2) stations with appropriate LOP's are required but the departure point and continuous operation are a necessity.

Two (2) significant problems with the OMEGA navigation system are its overall accuracy which is in the order of 1 to 2 nautical miles and the lane ambiguity problem.

The sources that contribute to error of the OMEGA navigation system are:

(a) Diurnal Effect - The diurnal effect is caused by the sun's position which effects the height and shape of the ionosphere which by day lowers the height of the ionization region thereby increasing the phase velocity. The converse takes place at night. The diurnal effect is seasonal and non-linear during transition.

(b) Ground Conductivity - The conductivity of the earth directly affects the phase velocity of OMEGA signals. This is especially true where the signal path is through polar regions where the attenuation through ice is high and there is a subsequent slowing of the phase velocity.

(c) Frequency - The use of the different frequencies result is errors because the propagration in the VLF spectrum is non-linear.

(d) Earth's Magnetic Field - The earth's magnetic field effects the attenuation rate and relative phase velocities.

OMEGA lattice tables and OMEGA propagation correction tables are issued by the Defense Mapping Agency Hydrographic Center.

The lane ambiguity problem stems from the nature of the OMEGA system. A pair of transmitters set up standing waves between the two (2) transmitters. Zero phase contours represent one half wavelenghts at the transmitted frequencies. Because the LOP can lie between any consecutive zero phase contours or lane the identification of the proper lane becomes necessary. This can be accomplished by maintaining a continuous OMEGA lane count, by alternate means of obtaining position fixes, or by multiple frequency operation. The maintenance of a continuous lane count over long period of time is difficult, if not

impossible. Weak signal strength of the transmiiter at the observer's position, malfunction of the receiver or of the transmitter, change from one pair of stations to another, or atmospheric noise all tend to cause loss of proper lane count. Alternate means of obtaining position fixes are available on the VANGUARD but most commercial vessels depend on the sextant, chronometer, and tables to determine an accurate fix. Weather conditions may preclude the obtaining of such a fix for long periods of time. With only one frequency (10.2 KHz), the user must know his position to within ±4 nautical miles. When the 10.2 KHz frequency is ued in conjunction with the 13.6 KHz frequency, constant lane contours appear at every fourth zero phase for the 13.6 KHz frequency and every third contour for the 10.2 KHz. This results in a wide lane three times the single lane width. By comparison of the LOP for the two (2) frequencies, a unique LOP is defined within the wide lane. A known position to ±12 nautical miles is then required to initiate OMEGA lane counting. This same technique can be expanded using 11 1/3 KHz where the unambigious lane width of 72 nautical miles thus requires the navigator to know his position within ±36 nautical miles. Fig. 12.

TIME and FREQUENCY

Before concluding, let me review how time and frequency are used in the SPAMS. The SINS utilizes 1 PPS and 10 PPS from the timing system in order to synchronize the MINDAC with the ship's instrumentation. Provision is made to automatically switch to the computer's internal clock should there be any failure of the ship's timing system.

Star Fixes require an accurate knowledge of real time. Because one second of time is equivalent to fifteen seconds of arc, real time must be known to an accuracy of fifty milliseconds if position errors due to time are to be less than one second of arc. The MINDAC receives two pulse trains from the timing system 100 PPS IRIG B and 2 PPM. The IRIG B is not used directly but instead utilizes the basic 100 PPS rate to provide the basic source of real time. The 100 PPS rate provides a resolution of 10 milliseconds in real time. The 2 PPM is used as the repetition rate for counting the 100 PPS pulses.

The Navigation Satellite System uses a basic 5 MHz signal source for the doppler counting function in the receiver. Any error in this signal source will result in a position error. A frequency standard with an accuracy of a few parts in 10^{10} is required.

Loran 'C' and OMEGA require the accuracy of a crystal frequency standard when used in the hyperbolic mode. In the rho-rho or range mode, a Cesium frequency standard is required.

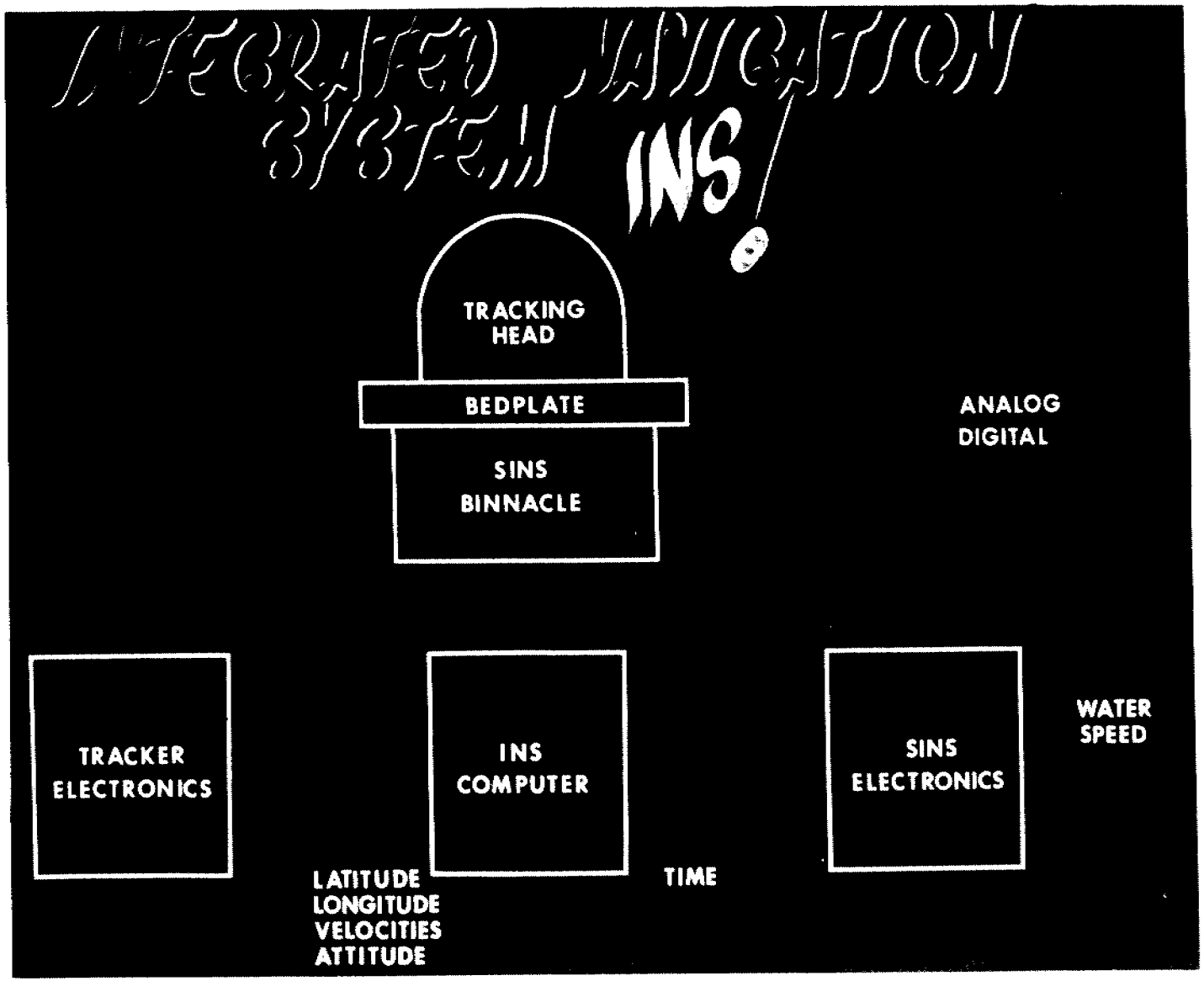
INTEGRATED NAVIGATION SYSTEM
INS!
TRACKING HEAD
BEDPLATE
SINS BINNACLE
ANALOG
DIGITAL
TRACKER ELECTRONICS
INS COMPUTER
SINS ELECTRONICS
WATER SPEED
LATITUDE
LONGITUDE
VELOCITIES
ATTITUDE
TIME

Figure 1

INTEGRATED NAVIGATION SYS.

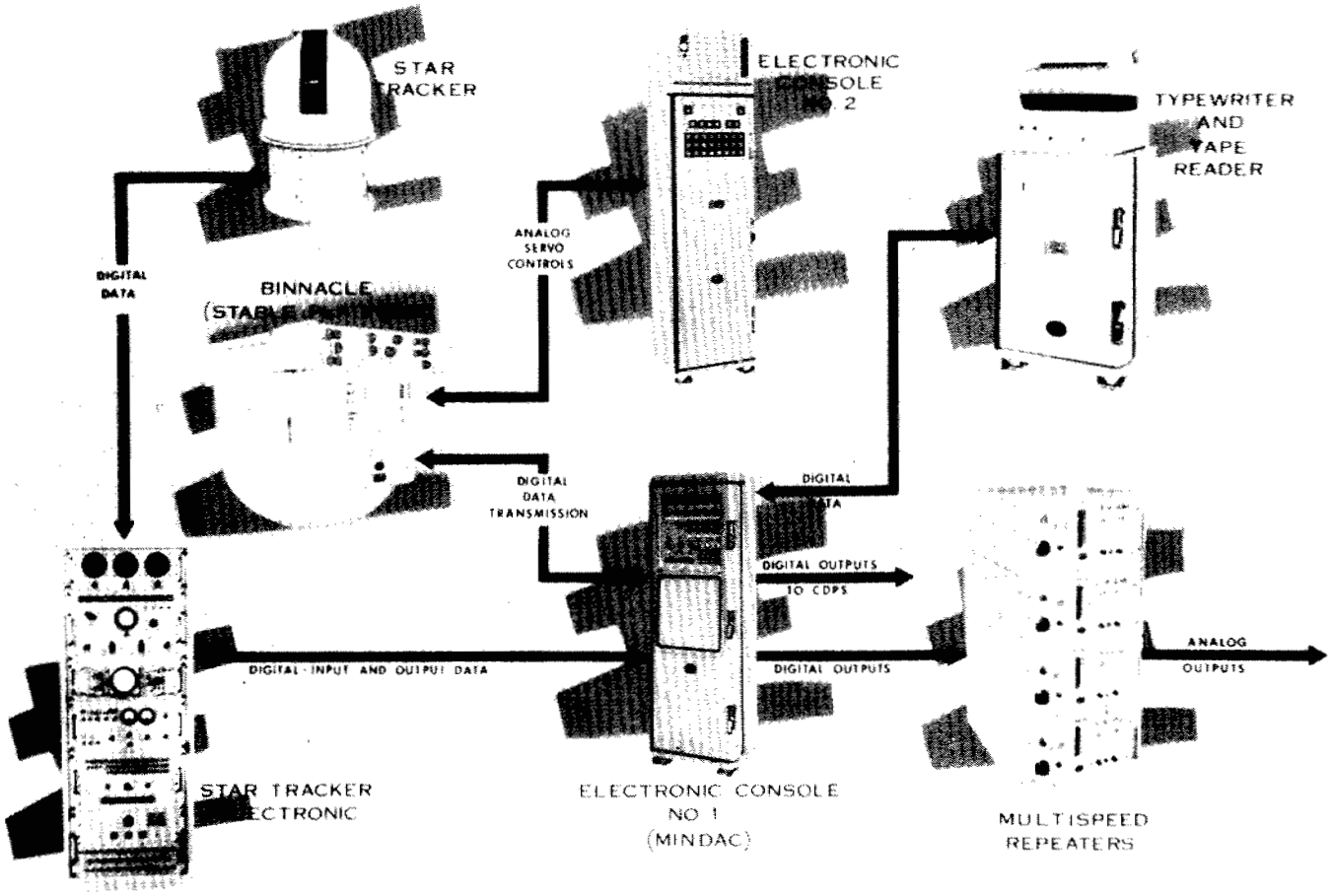

SINS MK 3 MOD 5

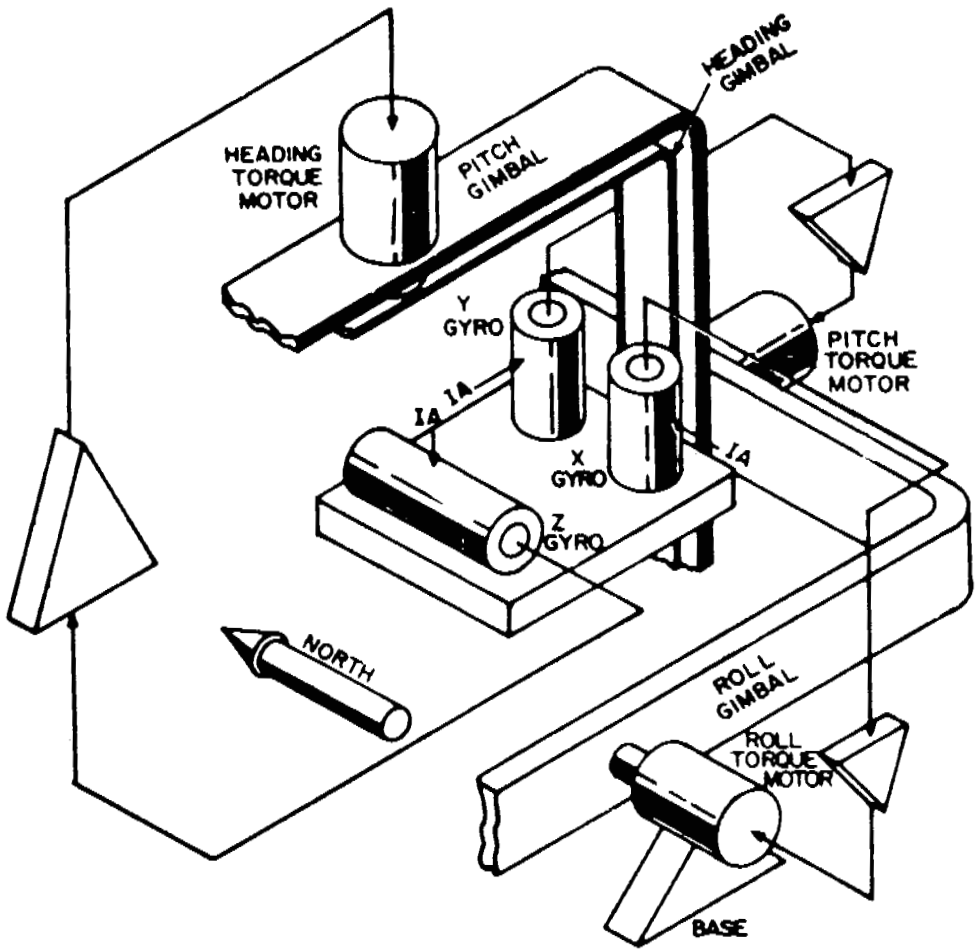

Figure 3. Three Axis Stabilization

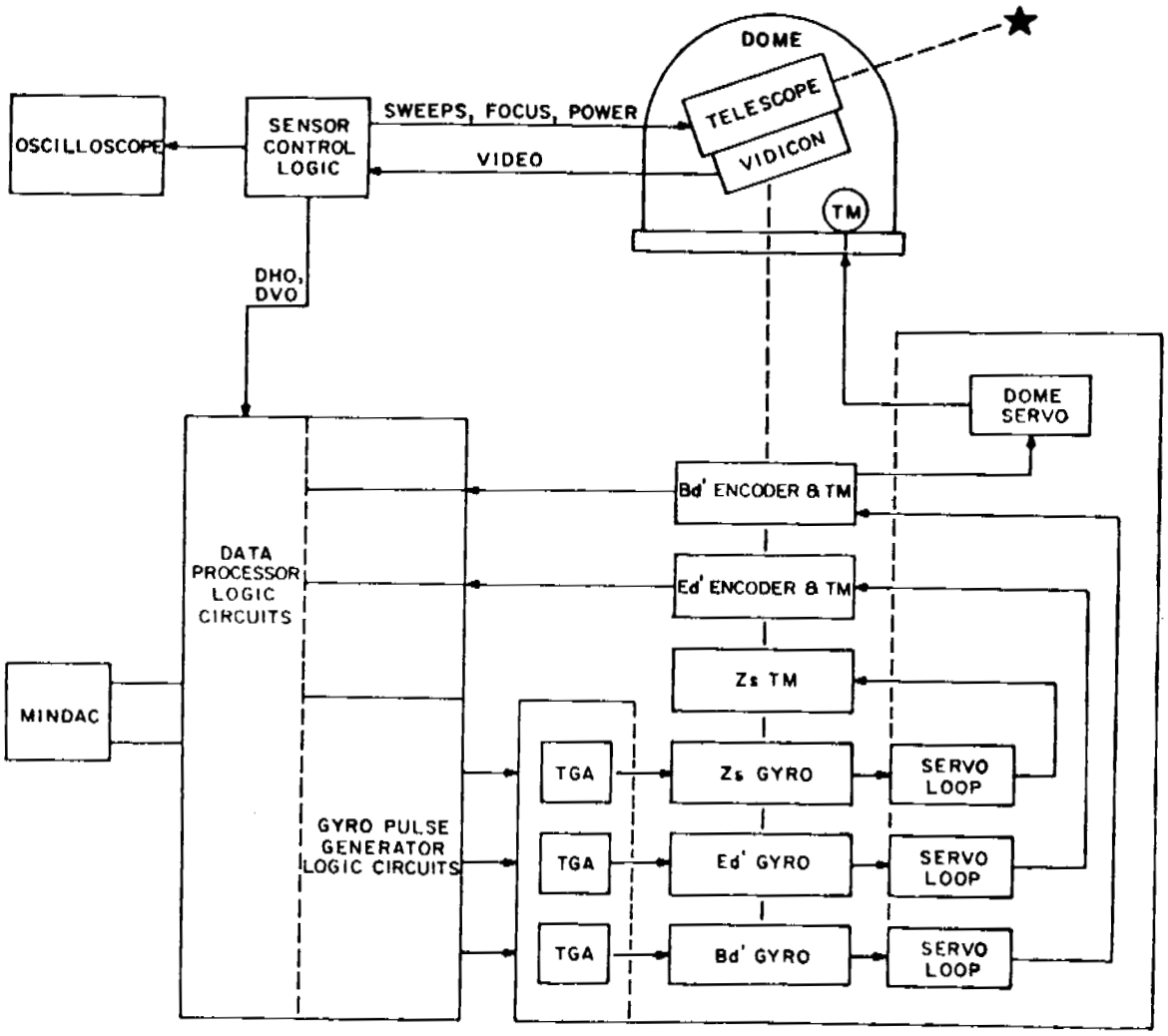

Figure 4. Marine Star Tracker Simplified Block Diagram

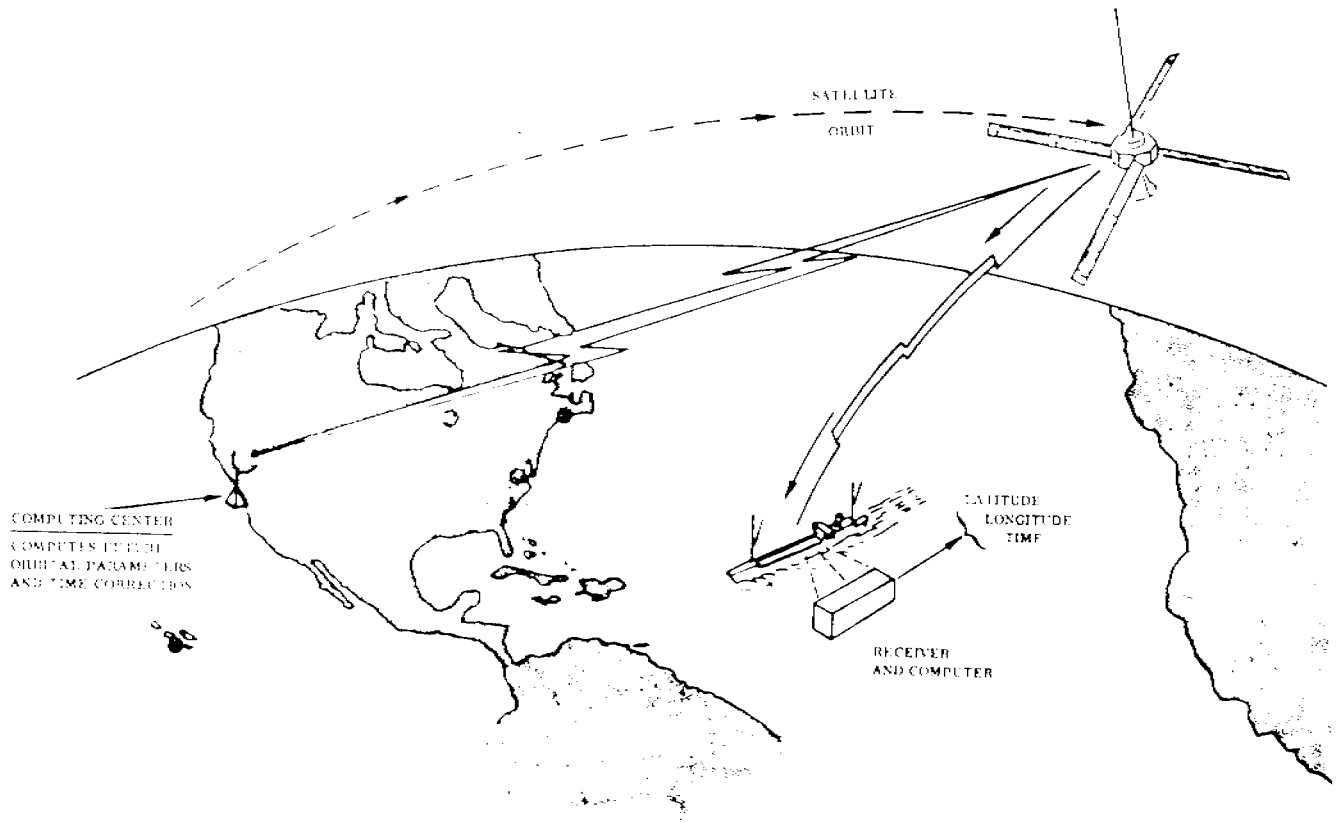

Figure 5. The Navy Navigation Satellite System

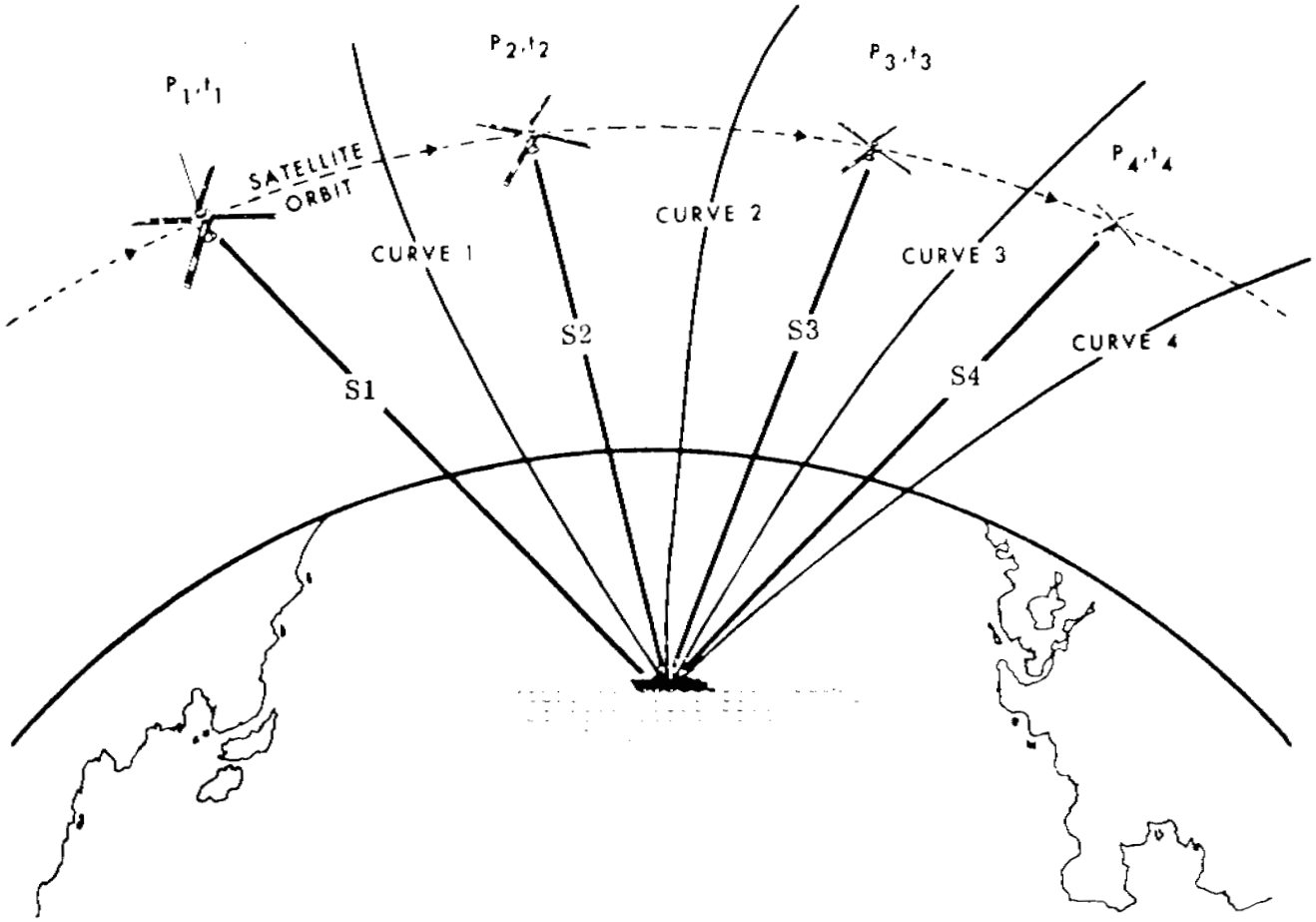

Figure 6. Obtaining a Position Fix Using Satellite Navigation Equipment

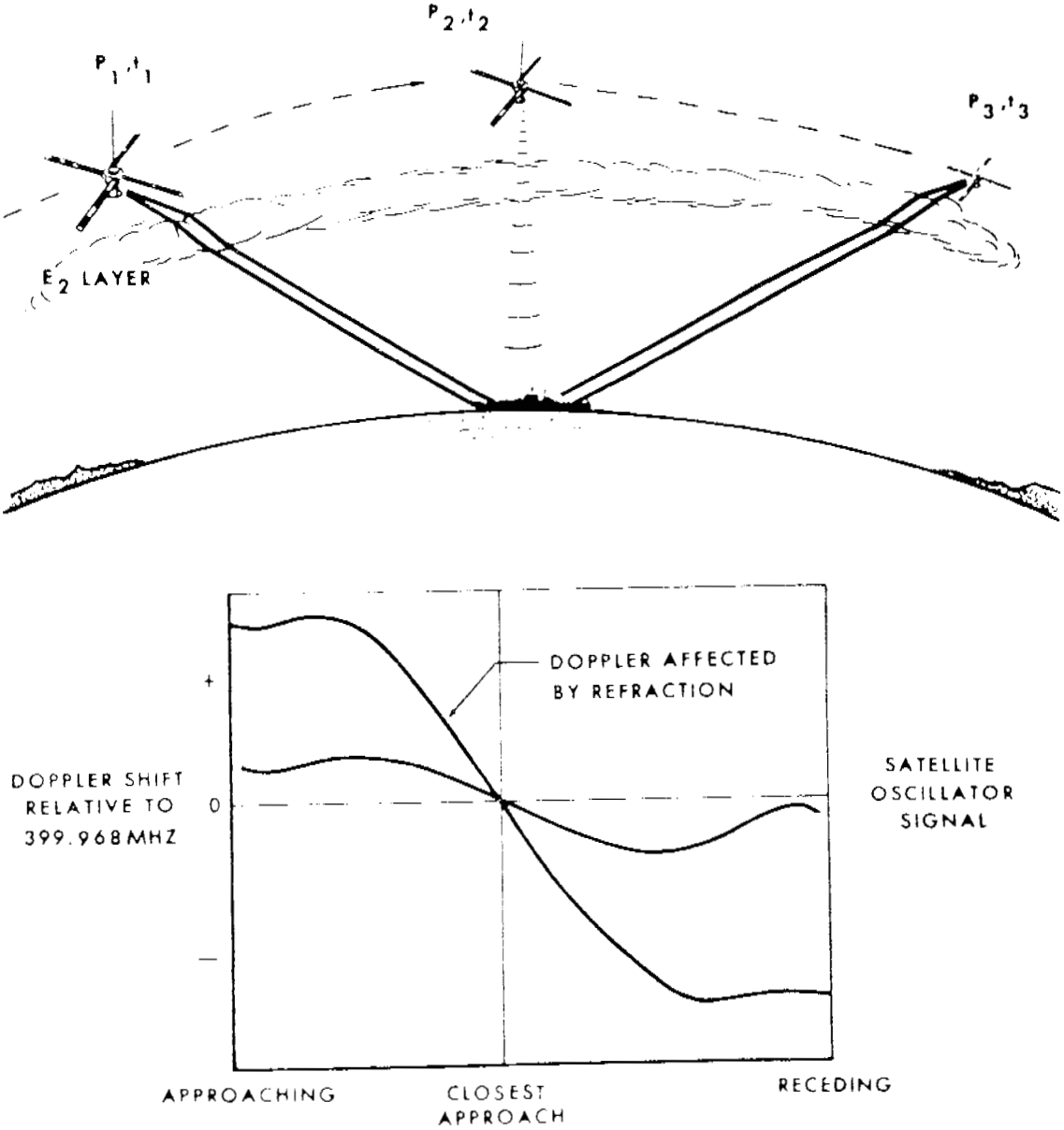

Figure 7. Satellite 400 MHz Signal Subjected to Refraction

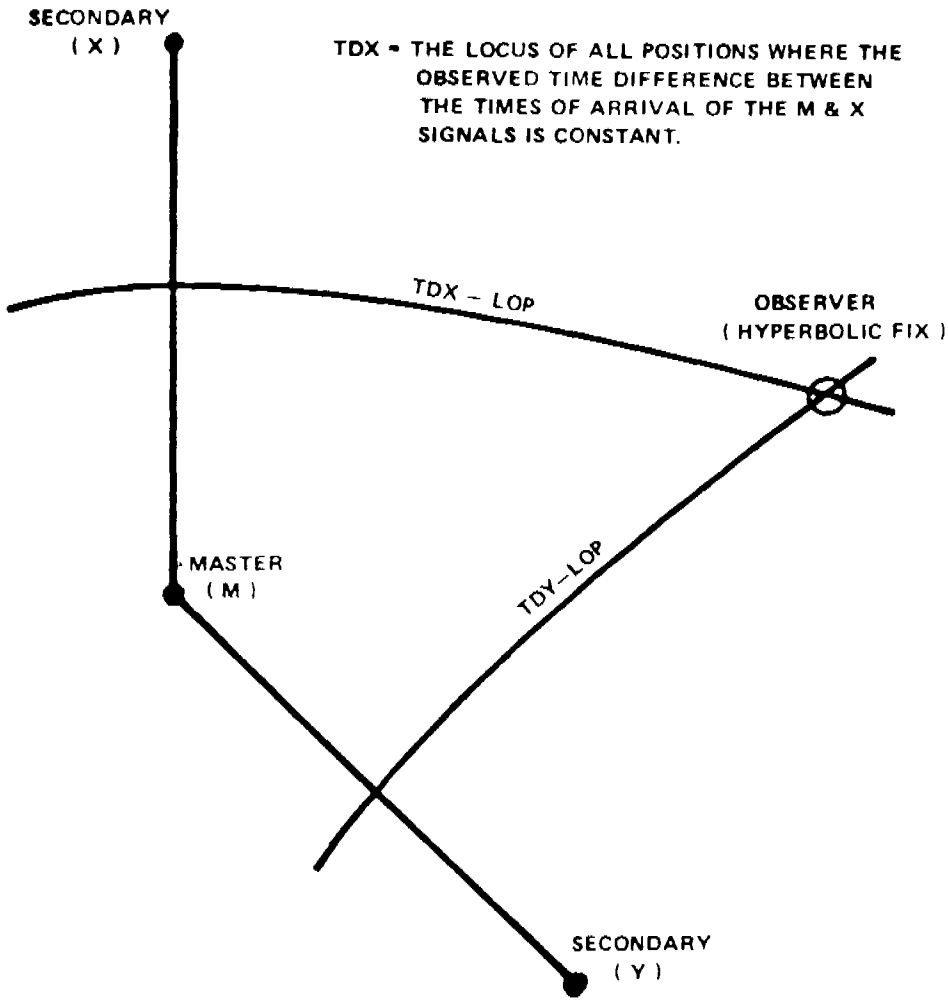

HYPERBOLIC FIX GEOMETRY

Figure 8

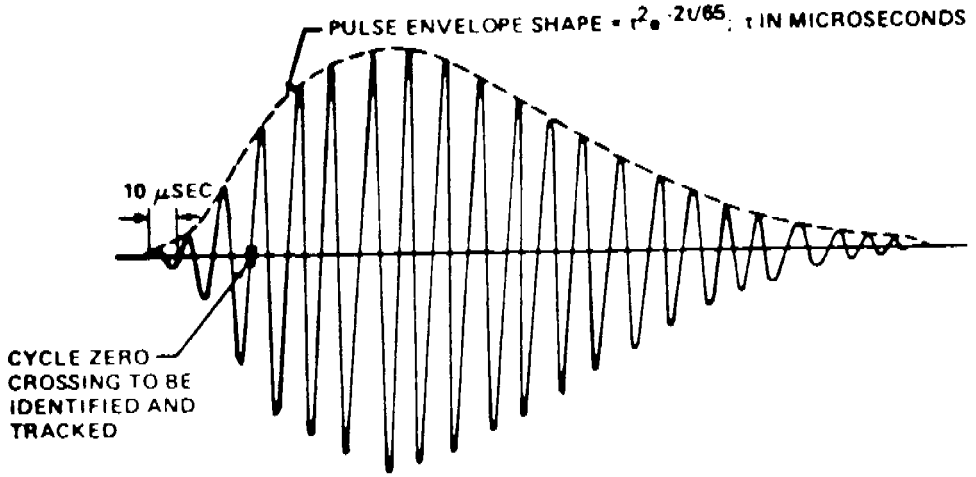

LORAN–C PULSE

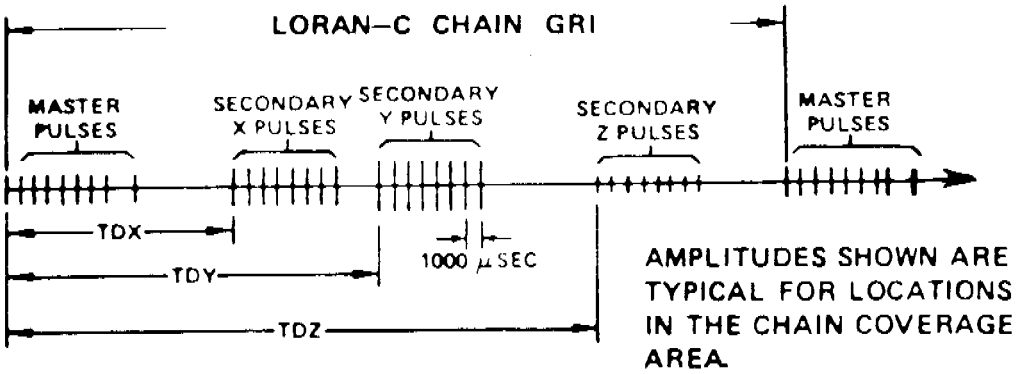

EXAMPLE OF RECEIVED LORAN–C SIGNAL

Figure 9

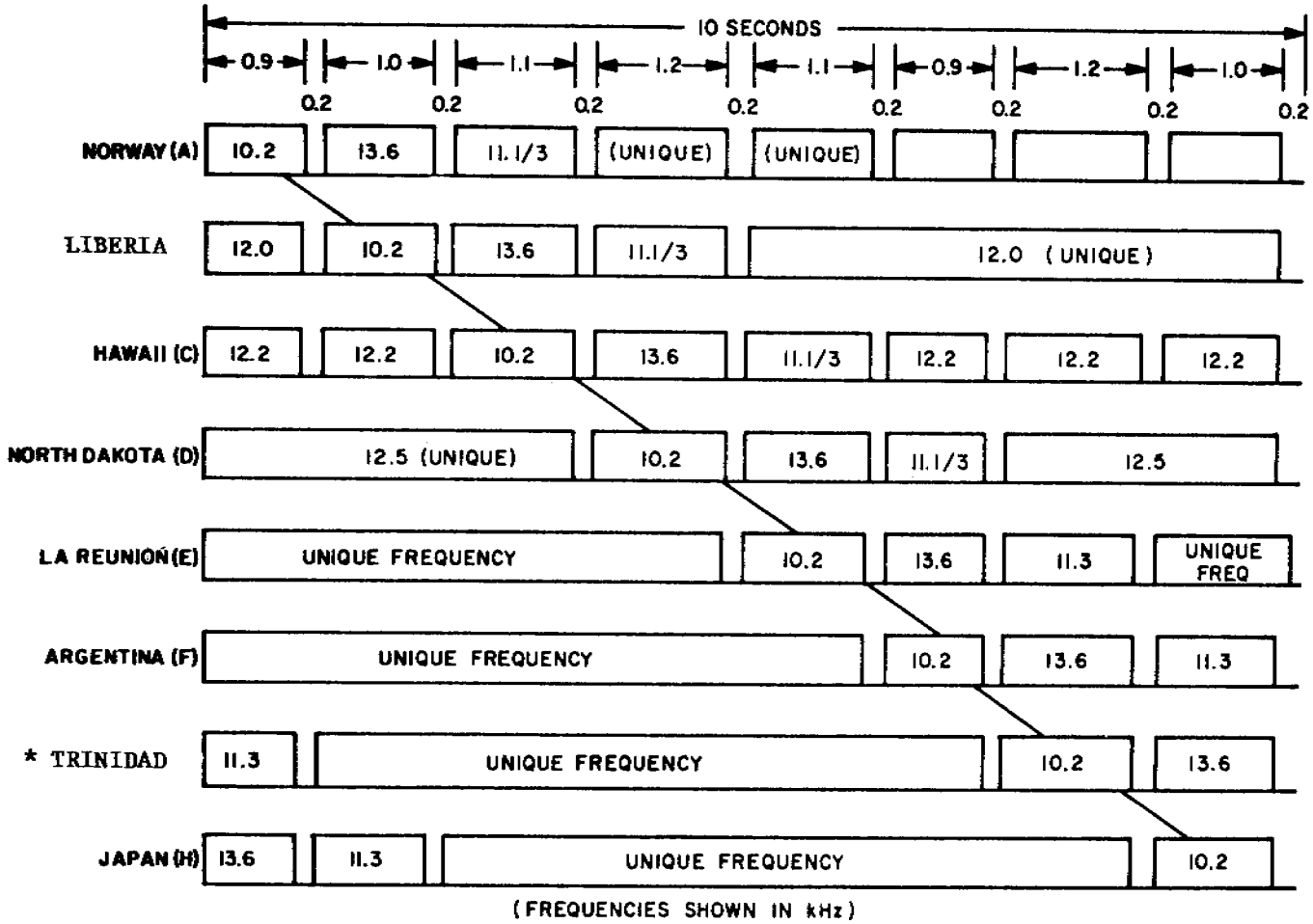

* Temporary

Omega Signal Format

Figure 10

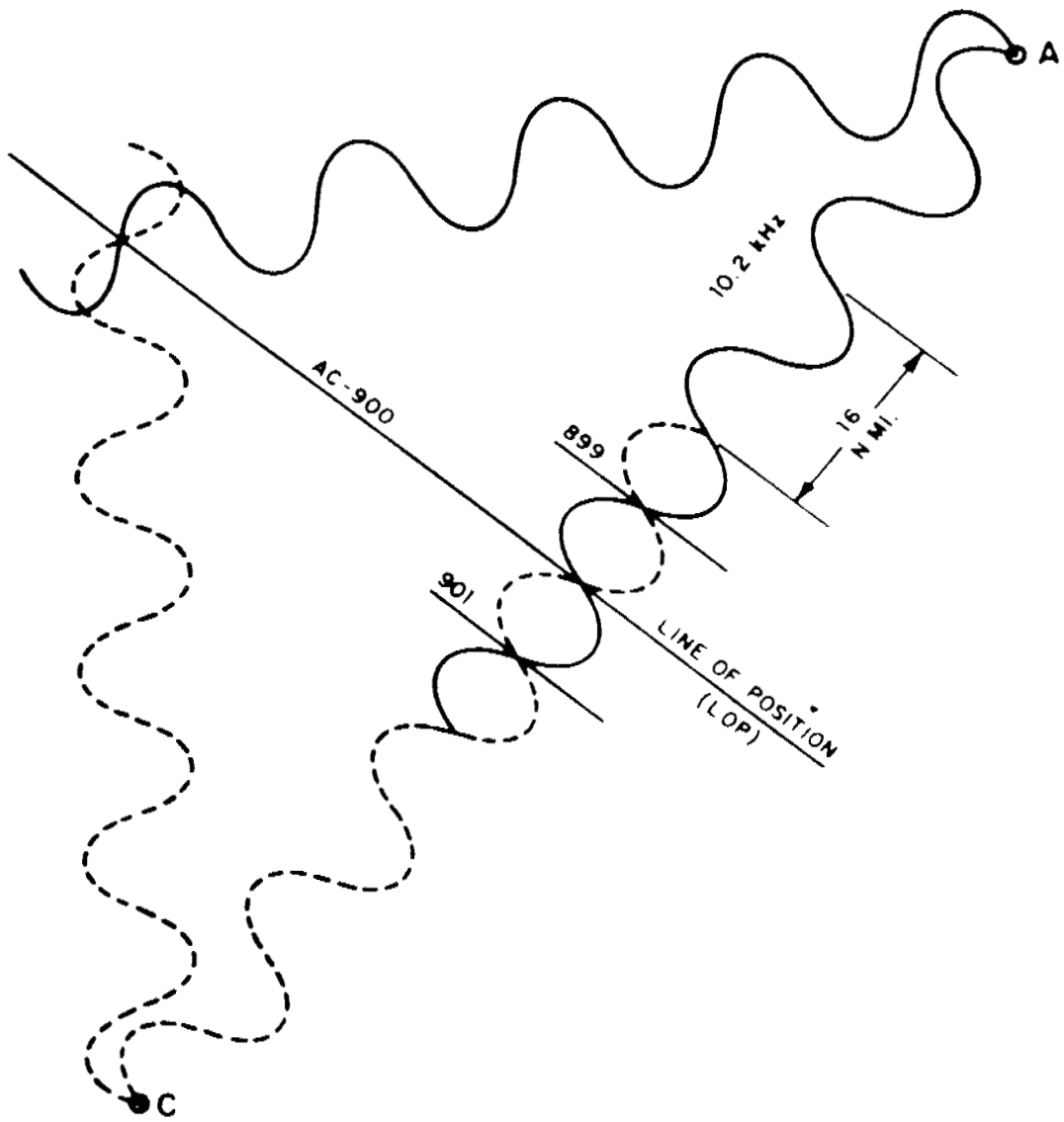

Omega Lines of Position

Figure 11

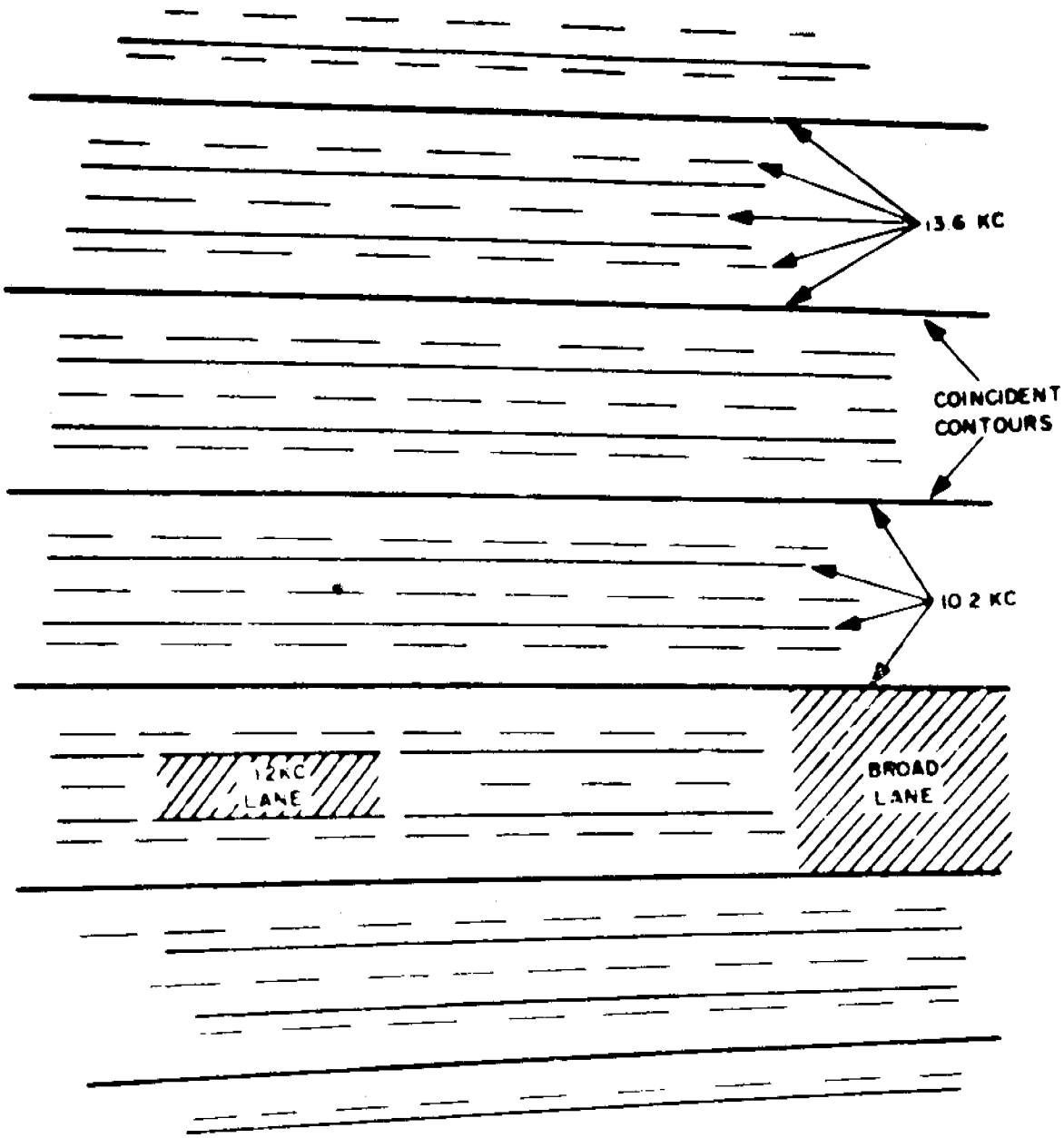

Figure 12. Principles of Lane Resolution

QUESTION AND ANSWER PERIOD

MR. RUEGER:

I would say you have had a very thorough rundown of all the navigation aids that are available today on a modern ship.

DR. REDER:

You listed frequency dispersion as an error for the Omega system. I say this dispersion is a blessing because if the dispersion did not exist, you could not eliminate propagation errors by receiving two frequencies, so long live dispersion, and I think it should be taken out of your sources of error.

MR. McKENNA:

No comment on that one.

MR. CHI:

Chi, Goddard Space Flight Center.

In the case of Omega navigation system, I think probably it should be pointed out that it is VLF, however, there is a diurnal problem involved for navigation, but the long range property should be brought out. That is the superior property for the navigation system as compared to other techniques.

MR. MC KENNA:

Well, the advantage of Omega is that it is worldwide. Loran C is limited in geographic area. There are other systems, like differential Omega to improve your accuracy. Let me get into differential Omega. Actually it is merely a bias. If you have some local means of obtaining position on the ship itself, like Navsat or the Star Tracker, you can actually determine what your propagation bias is.

Normally, when people think of differential Omega, they think of a land-based station which transmits a biased or a propagation bias for the user. It is a good system, but it has limitations, especially if you lose lane count.

DR. COSTAIN:

Costain, NRC.

I enjoyed very much this comparative study of these systems. I would like to suggest inclusion of another system. I suffered a momentary disappointment in confusing nanometers and nautical miles, so I hope the metric system will be included before too long.

MR. MC KENNA:

I learned nautical miles.

DR. KLEPCZYNSKI:

I have a question on the Star Tracker. You quoted errors there of about 0.5 nautical miles. Is that system design error, or actually have you tried to use it to get that accuracy?

MR. MC KENNA:

It is in use presently, and we get accuracies of 0.5 nautical miles. The system is operational.

DR. KLEPCZYNSKI:

Okay. I have a question then. Do you account for DUT-1? How do you get it or make use of it?

MR. MC KENNA:

I am not familiar with the DUT-1.

DR. KLEPCZYNSKI:

That is the difference between, say, the uniform or universal time coordinated and the actual time of the rotation of the earth, DUT-1, which I assume you must be referring your angular measures of the star system to.

MR. MC KENNA:

We use the ship's timing system. We are using the ship's timing system for all our timing references.

MR. RUEGER:

You failed to mention the area of operations of Vanguard, I believe. Can you identify in what part of the world you want to operate?

MR. MC KENNA:

The Vanguard operates in all parts of the world. At the present time, it is in the Indian Ocean, and has been for about six months.

MR. RUEGER:

You mentioned the deflection of the vertical. I wondered if you had good enough data in that part of the world to do the Star Tracking to this accuracy.

MR. MC KENNA:

Actually, it is one of the errors we don't know. The error generally is about the accuracy of about 30 seconds, but really it does not significantly enter the picture. I could, and it does where we run into the situation where the ship is near a land mass. You can actually tell by what happens to the inertial system that the ship is going over a sea mountain or something of that nature. We have to recalibrate the sins because of it.

MR. RUEGER:

In order to meet the requirements you laid out of a .75 nautical mile, by what method can you justify to yourself that you have realized this performance in all points of the world?

MR. MC KENNA:

We have run tests with the Vanguard and off the Florida Coast. There are two Loran networks down there, the A net and the B net. Periodically we do check out all the systems to see that they are working properly, and we do achieve that accuracy. As a matter of fact, most of our accuracy is less than .5 nautical miles.

MR. RUEGER:

That is rather a local geographical region. I wonder if

you can extrapolate that well.

MR. MC KENNA:

I think we can. The deflection of the vertical is going to cause an error, but it will cause an error like .1 nautical miles, something of that nature.