A MICROPROCESSOR DATA LOGGING SYSTEM FOR UTILIZING TV AS A TIME-FREQUENCY TRANSFER STANDARD

D. D. Davis
National Bureau of Standards
Boulder, Colorado

ABSTRACT

The TV network color subcarriers have been used for several years as frequency transfer standards. Additionally, a time transfer method using TV line-10 is presently used for maintaining clock synchronization at the microsecond level. This paper describes an NBS-developed microprocessor data logging system that automates both functions in a relatively inexpensive package.

Three of these systems are in routine use to collect the color subcarrier and line-10 data published in the NBS Time and Frequency Services Bulletin. Two additional systems are used to monitor the station clocks of WWV/WWVB and the GOES satellite clock at Wallops Island, Virginia.

BACKGROUND

NBS has developed several techniques that allow time and frequency users to calibrate an oscillator using the TV network color subcarriers as transfer standards [1,2]. These techniques take advantage of the fact that the TV networks use 5 MHz rubidium or cesium standards and synthesize the color subcarrier by using the ratio:

$$3.57954545...\text{MHz} = \frac{63}{88} \times 5 \text{ MHz}$$

User equipment starts with 10, 5, 2.5, or 1 MHz and synthesizes 3.579545...MHz by using the 63/88 ratio. The locally generated 3.58 MHz may then be phase compared with the color subcarrier from a TV receiver using one of several techniques. The least expensive technique uses a colored vertical bar on the TV screen as a phase indicator. Since the TV networks' rubidium standards are offset by approximately -3×10^{-8} (30ns/sec), the user must adjust his oscillator until the indicated phase changes 360° in about 9.3 seconds. A calibration accuracy of 1×10^{-9} can usually be achieved in a few minutes, limited primarily by the user's ability to accurately time the phase changes.

More expensive digital calibrators measure this "9-second" beat note period and compute and display this offset on the TV screen. The standard deviation of 15-minute averages is typically less than 2×10^{-11}.

In order to provide user traceability to NBS, we measure the frequency offsets of the six primary network standards (three in New York and three in Los Angeles). The microprocessor data logging systems were developed to provide the capability of continuous averaging of the color subcarrier offsets on up to four channels. A "line-10" time transfer capability was originally included to allow calibration of the reference used with the processor on Lookout Mountain (overlooking Denver). Later, we switched all published line-10 measurements to Lookout (where continuous network microwave feeds are available) because one of the local network stations went to all tape delay.

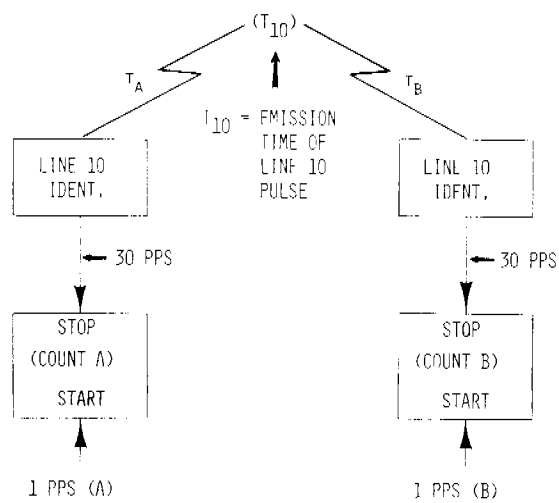

Fig. 1-The TV line-10 time transfer technique

The "line-10" time transfer technique is illustrated in figure 1. Two cooperating locations are in common view of a TV station or network. Both locations start their time interval counters at an agreed-upon second, and the counters are stopped by the common TV signal, within 1/30 second. The difference of the counter readings defines the relationship between the 1 pps signals.

$$\text{COUNT A} = 1\ \text{PPS(A)} - (t_a + T_{10})$$

$$\text{COUNT B} = 1\ \text{PPS(B)} - (t_b + T_{10})$$

$$\text{COUNT A} - \text{COUNT B} = \underbrace{1\ \text{PPS(A)} - 1\ \text{PPS(B)}}_{\text{CLOCK DIFFERENCE}} - \underbrace{t_a + t_b}_{\text{PROPAGATION PATH DIFFERENCES}}$$

The counter difference includes the propagation path difference between the locations and the T_{10} source; so for absolute measurements, the path must be calibrated--most practically with a portable clock. If the line-10 technique is to be used only to measure rate differences of (A) and (B), absolute measurements are not required. All that is necessary is to determine the counter differences on successive days or weeks to determine the relative rates of the two clocks.

LOGGING SYSTEM FUNCTIONS

The logging system performs two basic functions: It averages 3.58 MHz fractional frequency offset data and it measures line-10 time difference readings. These functions are illustrated in figure 2 and described below.

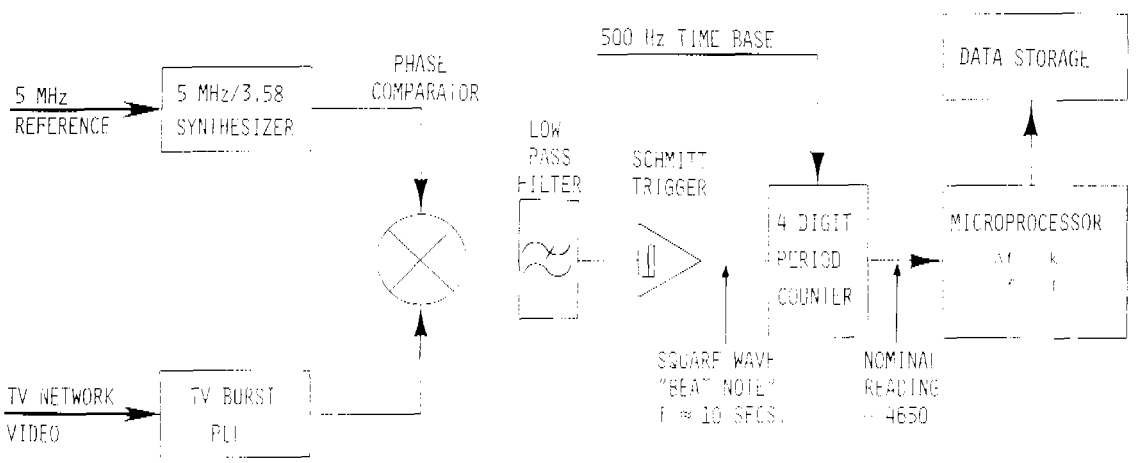

Fig. 2-Block diagram, 3,58 MHz fractional frequency measurements

3.58 FRACTIONAL FREQUENCY OFFSET MEASUREMENTS

The fractional frequency offsets of the network color subcarriers are measured using the "beat note" method. Network video is applied to a

phase-locked loop to regenerate the 3.58 MHz from burst. The regenerated network 3.58 MHz and a locally synthesized 3.58 MHz are applied to a balanced mixer phase comparator. The resultant beat note is processed through a low-pass filter and Schmitt trigger to recover a square wave of the beat note. The beat note period (nominal 10 seconds) is measured by a 4-digit counter. Each time a 10-second measurement cycle is completed, the processor converts the time measurement "T" into an offset value by dividing "T" into a constant. For the 500-Hz time base used, the constant required is 1396825. The resultant frequency offset (6 digits) is checked for validity. The microprocessor checks the validity as follows:

Each network has a "screen word" stored in memory. When the processor services a channel, it fetches the screen word for testing the validity of the measured offset. The format of the screen word, stored in random access memory, is:

3 0 0 4 2 0	2 0 0	0 6 0	0 1 9	A
EXPECTED OFFSET: $\times 10^{-13}$	1 P WINDOW $\times 10^{-12}$	10 P WINDOW $\times 10^{-12}$	½HR WINDOW $\times 10^{-12}$	CHANNEL

$$\begin{array}{ll} 300420 & \text{EXPECTED} \times 10^{-13} \\ \underline{301430} & \text{MEASURED} \times 10^{-13} \\ 1010 & \end{array}$$

101×10^{-12} DIFFERENCE IS LESS THAN "1P" - <u>ACCEPT DATA</u>

For each "10-second" measured offset, the measured value is subtracted from the expected offset. The difference between the measured and expected value is then compared to the "1 P" window. If the difference is less than the 1 P window (in this case 2×10^{-10}), the data is accepted--otherwise it is discarded. The primary purpose of the 1 P screening process is to eliminate outliers caused by sudden phase jumps of the 3.58-MHz network signals. The window is set to accept at least 98% of all valid data points.

Two additional screening processes for "10 P" and half-hour averaged data are used to eliminate any data that may originate from other than the network primary rubidium standard. The final half-hour screening operation only accepts data that is within $\pm 1.9 \times 10^{-11}$ of the expected value. The entire screen word may be changed by keyboard entry to accommodate different expected offsets and frequency stabilities.

The processor accumulates one-half hour averages throughout a full 24 hours. At midnight, the processor computes the daily offset average for each network and stores this average, along with the count of one-half hour samples used to arrive at the daily average. The expected offsets in the screen words are also compared with the actual daily averages and the screens are either incremented or decremented by 1×10^{-12}--unless less than 10 half-hour samples were accumulated for the day, in which case the screens are not changed.

Up to 32 days of daily averages for four channels are stored in a "wrap-around" memory for recall by keyboard command. A printout of the Lookout Mountain data for eight days is shown.

	YEAR	DAY	HALF HOUR	MINUTE
CLOCK - TIME OF PRINTOUT:	1 9 7 6	0 0 0 0 0 3 1 3	3 1	2 7

	ABCE	CBSE	NBCE
TODAY'S VALUES:	29-2999.70	26-2998.55	28-3022.54
YESTERDAY:	47-2999.82	34-2998.60	46-3022.77
	45-2999.79	47-2998.70	46-3022.58
	45-2999.71	42-2998.36	43-3022.68
	45-2999.97	42-2998.90	43-3922.66
	44-3000.27*	45-2998.69	40-3022.79
	37-3000.30	40-2998.50	38-3022.39
	48-3000.10	47-2998.73	43-3022.56
OLDEST DATA:	45-2999.97	32-2998.94	35-3022.54

OFFSET x 10^{-11}

NUMBER OF HALF-HOUR SAMPLES

*ABCE CESIUM STANDARD WAS ADJUSTED.

Fig. 3-Eight-day printout of data from Lookout Mountain

The printout of daily averages provides the basic data needed for determining the frequency offsets of the network subcarriers. Also, the number of half-hour samples indicates how much network programming was available on a given day. However, users without a similar system are not likely to bother to accumulate 15 to 20 hours of data averages per

day. Provision was therefore made for readout of the half-hour averages in the form of differences from the expected value. A typical printout is shown below.

```
        CLOCK:  1976000002803201
  SCREEN WORD:  ABCE 2999802000600198

   HALF-HOUR    +02+04+04+04+**+**+**+08+**+**-00-00+09+04+08-01
 DIFFERENCES:   -01+04+01-01-00-05-04+08-02+05+03-01+10+01+07+05
  x 10^-12      +01+02+09+**+12-00-02+01+08+07+**+09+01+02+03+**
```

The clock indicates the time of printout; that is,

$$\underbrace{1976}_{\text{YEAR}}\ 00000\ \underbrace{280}_{\text{DAY}}\ \underbrace{32}_{\text{HALF-HOUR}}\ \underbrace{01}_{\text{MINUTE}}$$

Each two-digit number indicates the amount by which the actual half-hour average differed from the expected value in the screen word (29998×10^{-12}) in parts in 10^{12}. The sign preceeding indicates whether the actual value was higher (+) or lower (-) than the expected value. All numbers are rounded off to the nearest part in 10^{12}. That is, if the difference is -00.4×10^{-12}, it is rounded to - 00, $+00.5 \times 10^{-12}$ is rounded off to + 01. A double asterisk, +**, indicates either less than 900 seconds of valid data or the difference is greater than the 10 P window of $\pm 60 \times 10^{-12}$.

The half-hour difference storage is "wrap around" so the data are always current for the preceeding 48 half hours. By reference to the clock printout, we know the processor is working in half-hour 32 and has already updated half-hour 31. The half hours are counted 0 through 15 on the first line, 16 through 31 on the second line, and 32 through 47 on the third line, with "0" indicating midnight to 12:30 a.m.

The availability of the half-hour difference data allows us to tell when the network was on the primary rubidium and whether other standards that are within $\pm 60 \times 10^{-12}$ were used for program origination. In the past year, only NBC East Coast has used a second rubidium that was identifiable. This occurred during the evening hours (8:00 - 10:00 EST) and the unit differed by about 40×10^{-12} from the primary rubidium.

Fractional frequency offset stability for the measured data show consistent results for the six network paths. Typical results computed using the pair variance are tabulated below.

	MEASURED AT DENVER, COLORADO			MEASURED AT ABC HOLLYWOOD		
	ABCF	CBSE	NBCE	ABCW	CBSW	NBCW
$\sigma_y(2,\tau)$ τ = 1 DAY	1.2×10^{-12}	1.3×10^{-12}	1.4×10^{-12}	0.4×10^{-12}	1.1×10^{-12}	0.7×10^{-12}
$\sigma_y(2,\tau)$ τ = 30 MINS	5×10^{-12}	4×10^{-12}	4×10^{-12}	2.5×10^{-12}	2.2×10^{-12}	3×10^{-12}

Fig. 4-Typical measurement results

All measurements include the stability of the frequency standards at each end of the measurement path except for the ABCW data, where a common reference is used within the plant. The value for $\sigma_y(2,\tau)(\tau = 1 \text{ day})$ for ABCW is therefore representative of the best stability to be expected for one-day averages. Although we do not infer the measured daily stabilities are due to any one cause, the frequency standards used in these measurements are not in a well-controlled environment. The cesium reference on Lookout Mountain (Denver) is located in a completely enclosed, unheated equipment room, with temperature excursions of at least 20°C. The ABC cesium standards are in air conditioned equipment rooms, and as far as we know, so are the CBS and NBC rubidium standards.

Fractional frequency offsets for the network color subcarriers are published as weekly averages in the monthly NBS Time and Frequency Services Bulletin. Uncertainty for the published weekly averages is indicated as $\pm 2 \times 10^{-12}$ for ABCE and ABCW and $\pm 4 \times 10^{-12}$ for the other networks. These uncertainty estimates allow some margin for frequency drift of the network rubidiums.

The feasibility of the 3.58 MHz portion of the microprocessor data logging system has been proven in almost one year of on-line operation for the Denver and Los Angeles units. We had two failures of 741 operational amplifiers in the Los Angeles unit (out of four 741's in the unit). The problem was diagnosed over the telephone and with the able assistance of the ABC technical staff, the unit was repaired without a "service call" from Boulder to Los Angeles.

LINE-10 MEASUREMENTS

Daily line-10 readings for the three commercial networks are published by NBS and USNO [4]. The line-10 method has demonstrated a time transfer capability at the microsecond level on continental paths [5] and easily provides $\pm$ 0.1 μs when both users are within view of a common TV transmitter. The primary disadvantage of the line-10 method is the necessity of making measurements at a prescribed second on each network, each day.

The microprocessor data logging system on Lookout Mountain automates the line-10 measurements and stores up to eight days of line-10 data in the following format (only two days of data are shown):

TIME OF MEASUREMENT, UTC							
20:25:00	20:31:00	20:26:00	20:32:00	20:27:00	20:33:00	20:28:00	20:34:00
ABCE		CBSE		NBCE		KMGH	
02845534	02143283	03057606	02355350	00006951	02641371	03015894	02310001
01216367	00514109	01428530	00726275	01712462	01010204	02271490	01565647

The three sets of network measurements are made directly off the three network microwave feeds. The KMGH-TV measurement is made off the air and is used to calibrate the Lookout Mountain 1 pps.

KMGH		KMGH		KMGH		KMGH	
00358430	02989205	01032188	00326298	01705946	01000057	03021337	02315446
02950669	02244827	00287755	02918578	00961506	00255662	02276918	01571076

Simultaneously, a microprocessor system at the Boulder Laboratories makes measurements using the UTC(NBS) 1 pps as reference.

	ABCE		CBSE		NBCE		KMGH	
11/09	28516.40	21493.91	30637.12	23614.58	00130.57	26474.79	00054.43	00054.45
11/08	12224.58	05202.01	14346.21	07323.67	17185.53	10162.96	00054.28	00054.29
	PUBLISHED LINE-10 VALUES						CLOCK CORRECTIONS	

The Boulder processor accepts the data from Lookout over a dial-up data link, uses the 20:28 and 20:34 KMGH measurements to compute the Lookout clock correction, adds a fixed 6.63 μs correction, and prints out the final published line-10 values. A microprocessor system identical to the Boulder unit is used at Ft. Collins to reference the WWV station clock back to UTC(NBS).

The Boulder and Ft. Collins processors measure and store eight line-10 readings each day. The Ft. Collins unit reduces this data to eight clock difference readings per day for eight days.

Both the Lookout-Boulder and Boulder-Ft. Collins processor pairs may be used in an "immediate" line-10 mode to determine clock difference readings. A printout of two sets of "immediate" difference readings between Lookout and Boulder is shown below.

IMMEDIATE LINE-10 DIFFERENCE READINGS - MICROSECONDS DIFFERENCE

-00054.44	-00054.45	-00054.45	-00054.46	-00054.45	-00054.45
-00054.44	-00054.45	-00054.45	-00054.45	-00054.46	-00054.45

To obtain these readings at Boulder, the user dials up the data line to Lookout, places a switch on the front panel of the Boulder unit in "line-10 multiprocessor" mode, and types in a 4-character command. The command goes from the keyboard to Lookout and is "echoed" back to the Boulder processor. The Lookout processor responds to the command by sending six sets of line-10 readings on six successive seconds to the Boulder processor. The Boulder processor makes simultaneous line-10 readings, computes, and prints out the differences as shown.

Single reading resolution of the automated line-10 system is limited to $\pm$ 10 ns by the 100 MHz time base in the associated time interval counters. Long term stability is limited by variations in envelope delay of the TV tuners. Periodic comparison of the automated line-10 system with a manual back-up system indicates a peak-to-peak delay variation between the units of 40 ns. Since the long term delay variations of the implemented line-10 systems are at least as large as the single reading resolution, no attempt has been made to improve the resolution of published line-10 data by averaging multiple readings.

HARDWARE

The data logging system was designed around the 4-bit INTEL 4040 microprocessor. Although not as fast as later-generation 8-bit machines, it was available, relatively inexpensive, and already in wide use. Figure 5 is a block diagram of the major elements in the Lookout Mountain processor. All blocks inside the dotted lines are on the CPU card.

Three types of memory are used: 2048 bytes of read only memory for the program, 1024 bytes of read/write (ram) for data storage, and sixteen 16-digit ram registers for arithemetic scratchpad operations.

The CPU uses a hardware 1 pps $\rightarrow$ 1 ppm clock ($\div$60) with minutes, hours, days, and months counted by software. Use of the 1 ppm hardware clock allows the processor to perform relatively long Input/Output (I/O) operations without missing a software clock update.

A "beat note" phase compare, 4 digit time interval counter is provided for each of the three networks. Each of the three channels uses five integrated circuits. 5 MHz from a cesium standard, synthesized to 3.58 MHz, is used as a reference for the three phase compare channels.

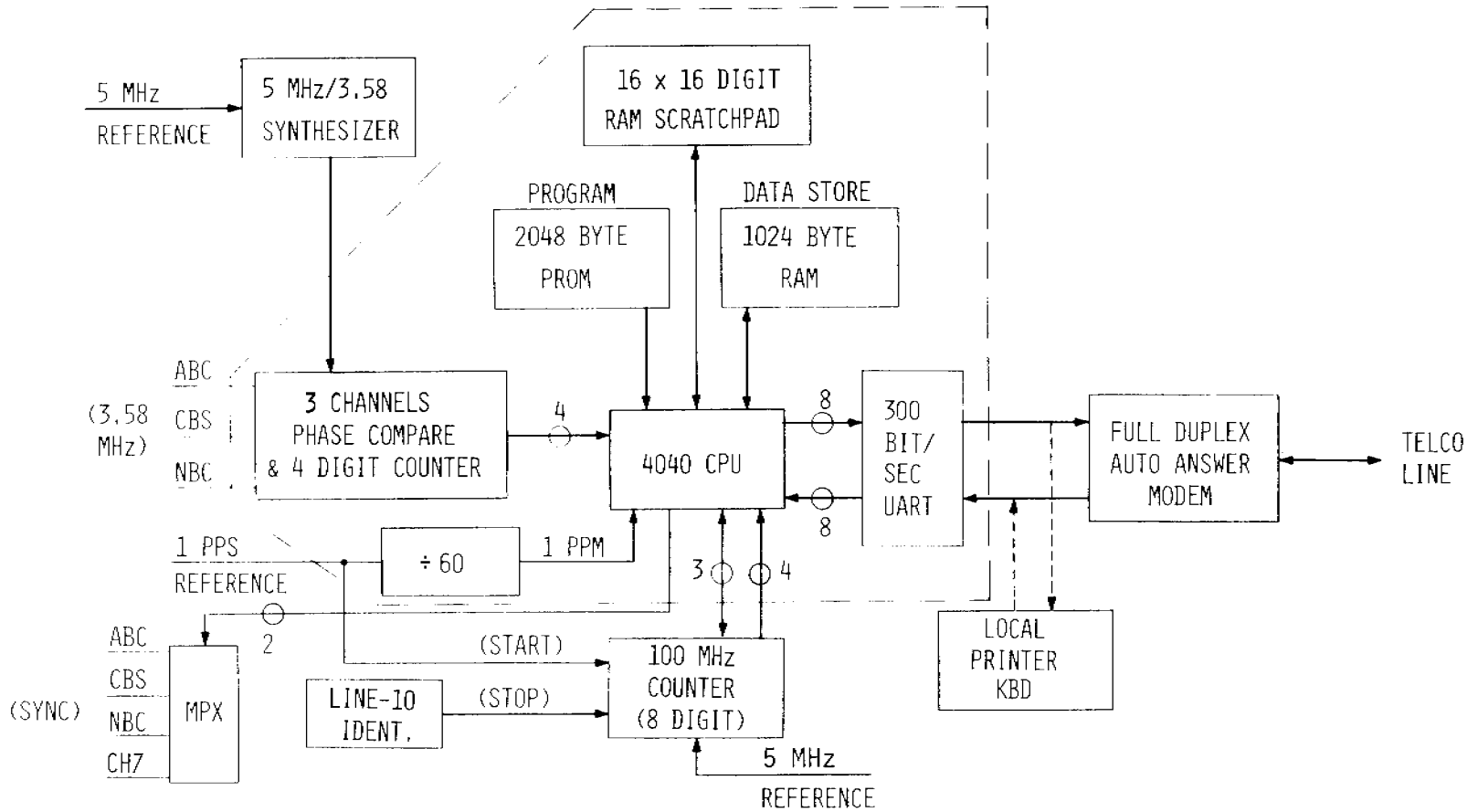

Fig. 5-Block diagram of Lookout Mountain microprocessor data logging system

I/O operations are performed at 300 bits/second (30 characters/second), full duplex through a standard RS-232 interface. A local printer/keyboard may be plugged into this interface; however, for our remote installations, an auto answer modem is used with a telephone company data access arrangement (Model CBS DAA).

Line-10 measurements utilize the circuits and inputs shown at the bottom of figure 5. Stripped sync at TTL level is multiplexed under processor control to a line-10 indentification circuit. The line-10 ident provides a 30 pps output, coincident with the trailing edge of the tenth line horizontal sync pulse of field one (odd field). A 100-MHz 8-digit time interval counter makes the line-10 difference measurements under CPU control. A battery back-up supply (not shown) provides up to two hours of operation for the CPU and memory in case of power failure.

A photograph of the CPU card, with the major elements identified, is shown in figure 6.

Figure 7 is a photograph of the 100-MHz counter used in the system. Interface of the counter to the CPU requires four data and three control lines. The control lines are "counter reset", "multiplex clock" (CPU ➡ COUNTER), and "count available" (CPU ⬅ COUNTER).

Each of the five data logging systems now in use has a slightly different configuration for both hardware and software. The previously described configuration is used at Lookout Mountain. The system at ABC Los Angeles has no line-10 capability but has four channels for 3.58-MHz subcarrier measurement (ABCW, CBSW, NBCW, ABCE). The system at Wallops Island, Virginia, has three channels of 3.58 MHz, three channels for line-10, and five channels for measuring the time difference between the master 1 pps and other 1 pps system inputs. The systems at Boulder and Ft. Collins (WWV) measure line-10 only, with no 3.58-MHz capability.

LOOKOUT MTN.	ABC, L.A.	WALLOPS ISLAND	BOULDER - FT. COLLINS
3 - 3.58 MHz 4 - LINE 10	4 - 3.58 MHz 0 - LINE 10	3 - 3.58 MHz 3 - LINE 10 5 - 1 PPS	0 - 3.58 MHz 1 - LINE 10

CONFIGURATION OF 5 SYSTEMS

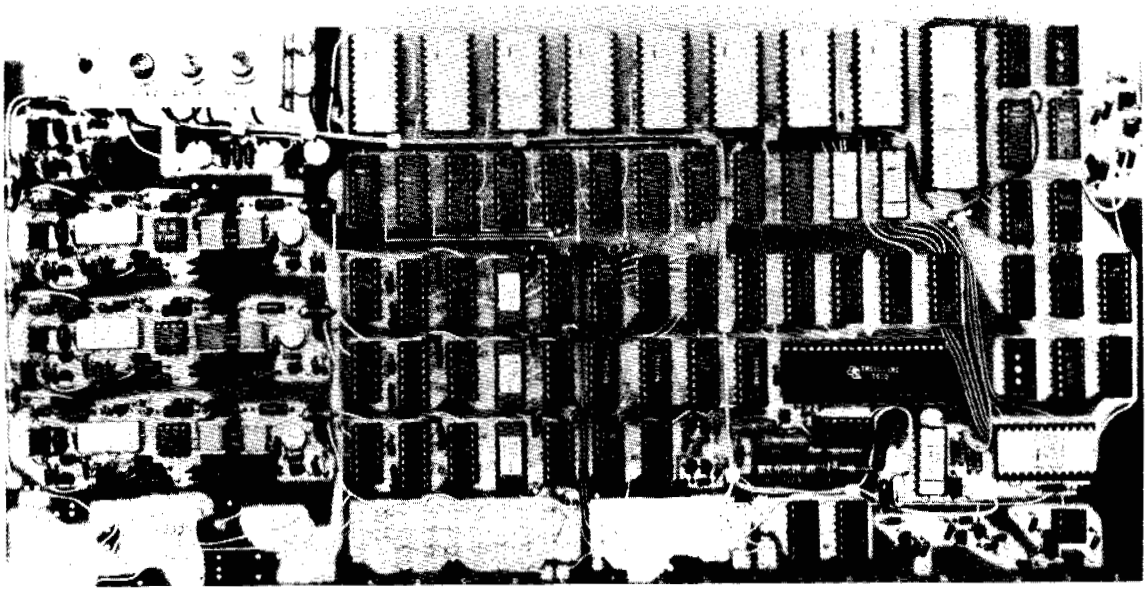

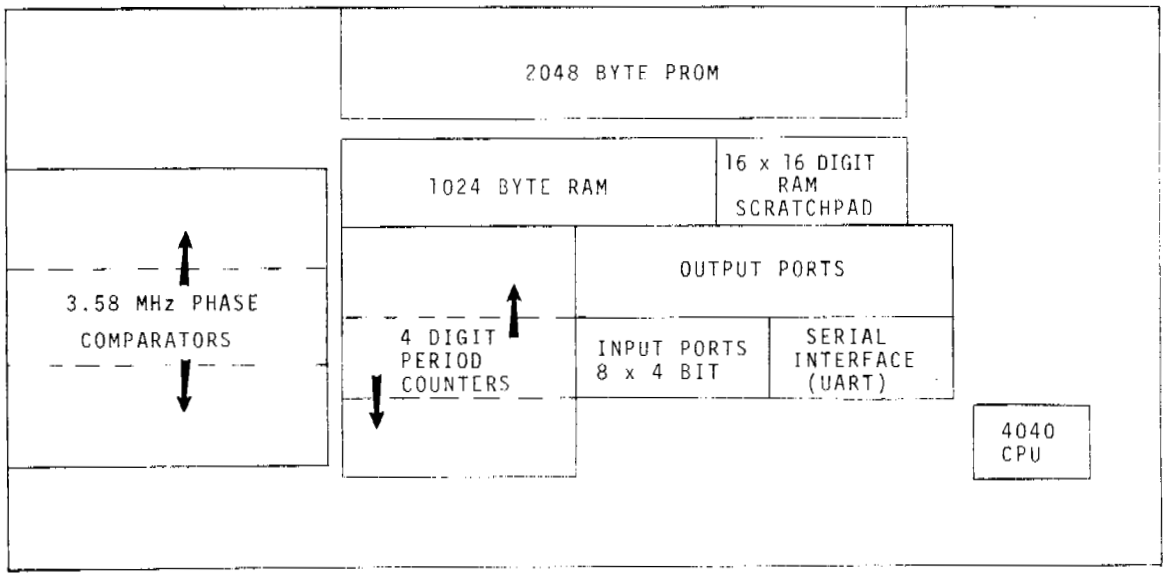

Fig. 6-Photograph of microprocessor card with functional elements identified

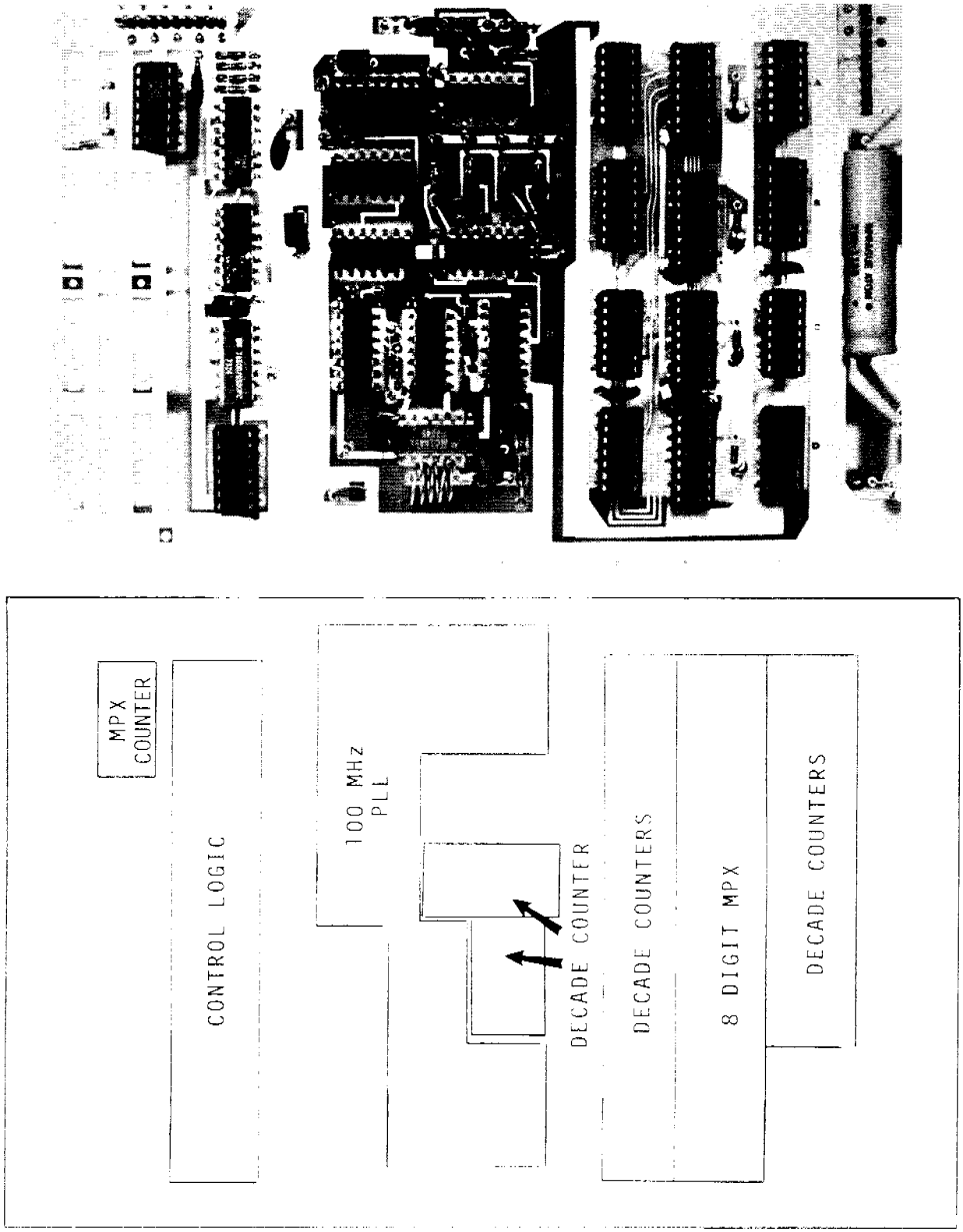

Fig. 7-Photograph of 100-MHz counter with functional elements identified

SOFTWARE

The programs used in the data logging systems were developed over a two-year period. The first program was about 1500 bytes long and processed only color subcarrier data. About two man-months were required to write and assemble it by hand. The program is stored in eight 1702A EPROMS. Since each 1702A stores 256 bytes, a total of 2048 bytes were available.

The prototype system was operated for approximately one year at the Boulder Laboratories. Program modifications were then added to incorporate the line-10 function. This increased the program size to about 1900 bytes and required another man-month for assembly of the program. Minor modifications of this "master" program tailor it to the unique requirements at each location.

Since a complete annotated listing of the software is over 60 pages long, it is not included in this paper. Anyone interested may obtain comprehensive documentation of the hardware and software by writing to the Time and Frequency Services Section, National Bureau of Standards, Boulder, CO 80302.

CONCLUSION

The microprocessor data logging systems described in this paper have proven to be reliable and relatively trouble free. Measurement stability of $\sigma_y(2,\tau)(\tau = 1 \text{ day})$ of less than 2×10^{-12} worst case for the color subcarrier data is sufficient for most applications. Operational use between Boulder-Ft. Collins and Boulder-Wallops Island have demonstrated the system works well in "real world" on-line applications. If interest warrants, NBS would consider making the on-line (dial-up) link available for general use. Users with similar systems could then obtain immediate subcarrier and line-10 data without manual data reduction from the monthly NBS Time and Frequency Services Bulletin.

ACKNOWLEDGMENTS

Our thanks to the Hewlett-Packard Company (Santa Clara Division) for providing the West Coast line-10 measurements that are published in the monthly NBS Time and Frequency Services Bulletin.

Placement of the data logging systems at ABC Hollywood and at the KMGH-TV transmitter on Lookout Mountain is crucial to our TV measurements. Our thanks to the participating organizations who provided space, power, and occasional emergency maintenance help at no cost.

We also acknowledge the cooperation of the TV broadcast industry in our efforts to develop useful time-frequency techniques using TV. In particular we cite the excellent cooperation of the ABC-TV technical

operations staff over the past six years. Many individual TV broadcast stations have also been generous with their assistance.

REFERENCES

[1] Davis, D. D., Calibrating Crystal Oscillators With TV Color-Reference Signals, Electronics, March 20, 1975.

[2] A New Frequency Calibration Service of the National Bureau of Standards, Time and Frequency Services Section Brochures, 1975.

[3] NBS Time and Frequency Services Bulletin, published monthly. Available upon request from Time and Frequency Services Section, National Bureau of Standards, Boulder, CO 80302.

[4] USNO Time Services Bulletin, Series 4, published weekly. Available upon request from Time Services Division, USNO, Washington, DC 20390.

[5] Allan, D. W., Blair, B. E., Davis, D. D., and Machlan, H. E., Merrologia, Vol. 8, No. 2, Apr. 1972, pp. 64-72.

[6] Davis, D. D., Blair, B. E, and Barnaba, J. F., Long-Term Continental U. S. Timing System Via Television Networks, IEEE Spectrum, Vol. 8, No. 8, Aug. 1971, pp. 41-52.

[7] Davis, D. D., Frequency Standard Hides in Every Color TV Set, Electronics, May 10, 1971, pp. 96-98.