HYDROGEN MASER FREQUENCY STANDARDS FOR THE DEEP SPACE NETWORK

Peter R. Dachel, Roger F. Meyer, Samuel M. Petty, Richard L. Sydnor
Jet Propulsion Laboratory
California Institute of Technology

ABSTRACT

JPL has been operating two experimental hydrogen maser frequency standards at the Deep Space Network (DSN) stations at Goldstone, California since 1970. Based on operating experience gained with these units and with a test bed maser system at JPL, a field operable production maser has been developed for use in the DSN. The first maser of this new design was installed at the DSN 64-meter station near Canberra, Australia in December 1975. Second and third units are presently under construction for the remaining DSN 64-meter stations at Madrid, Spain and Goldstone, California. While these DSN masers remain similar in basic configuration to the earlier experimental units, many design changes have been incorporated in both physics and electronics systems to effect improvements in the following areas: 1) short and long term frequency stability, 2) RF isolation of maser output lines, 3) lifetime of active physics components, 4) automatic fault detection and location, and 5) performance and reliability of the receiver/synthesizer system. Frequency stability measurements of the DSS 43 maser, using an updated experimental maser as a reference, resulted in a fractional frequency stability of 3.8×10^{-15} long term (τ = 90 seconds) and 1.1×10^{-13} short term (τ = 1 second).

INTRODUCTION

In 1965, the Jet Propulsion Laboratory (JPL) initiated a development program for a field operable hydrogen maser to meet the future requirements of the Deep Space Network (DSN). Two experimental hydrogen masers (Ref. 1) were subsequently built and installed at the DSN stations at Goldstone, California during 1970. Based on operating experience gained with these units and with a test bed maser system at JPL, a prototype hydrogen maser was recently developed for use in the DSN. This paper describes some of the unique features of this maser, and presents life expectancy, frequency stability, and other

performance data obtained to date.

The DSN hydrogen maser (Fig. 1) consists of two assemblies; a physics unit and an electronics rack. The physics unit is mounted on a shock-absorbing base and consists of the maser vacuum system, microwave front end, and four electronics modules that are associated with the hydrogen glow discharge. All other electronics, including the operating controls for the physics unit, are contained in the electronics rack.

PHYSICS UNIT

A simplified cross-sectional diagram of the physics unit is shown in Figure 2, and characteristics are listed in Table I.

High Output Power

Maser frequency stability in the time interval $0.1 \leq \tau \leq 10$ seconds is primarily determined by maser signal/noise ratio, and therefore maser output power. The DSN requirement is such that an output power level of at least -90 dBm is needed (see Figure 5) This is achieved by increased hydrogen flow rate at the expense of ion pump element lifetime and hydrogen spectral line broadening. The DSN maser has a nominal power output of -88 dBm at an operating hydrogen pressure of 10^{-6} Torr. Ion pump lifetime is calculated to be 3 years at this pressure.

Long Term Stability Without Cavity Tuning

For maximum reliability, it was decided that the long term frequency stability specification (time interval $\tau \geq 30$ seconds) should be met without the aid of the automatic cavity tuner. This constraint, and the large hydrogen linewidth caused by high flux operation, placed stringent requirements on 1) the frequency stability of the RF cavity, and 2) the stability of the hydrogen flow rate.

These requirements were satisfied in the DSN maser (see Figure 2) by 1) surrounding the RF cavity with a temperature regulated oven placed inside the vacuum, 2) providing low thermal conduction standoffs between RF cavity, inner oven, vacuum housing, ion pump, and support frame interfaces, 3) use of low temperature coefficient Cer-Vit[1] in the RF cavity assembly, 4) surrounding vacuum housing, microwave front end, and ion pump with thermal insulation, and 5) maintaining a stable hydrogen flux level by closed loop control of the palladium valve with an oven-stabilized Pirani pressure gauge.

---

[1] Trademark of Owens-Illinois Corp.

Maintenance

The separation of physics and electronics functions permits maximum access to the physics unit for maintenance, troubleshooting, etc. Components have been grouped into replaceable modules or assemblies wherever possible. Viton O-ring seals are used throughout and have proved satisfactory.

The time required for two field technicians to replace any physics unit component (excepting the ion pump body), and then again achieve vacuum, is one day or less. Perhaps the most complex and time consuming maintenance task would be replacement of an RF cavity component. This job requires one full day for disassembly and reassembly, and does not require hoists or other mechanical aids.

The repair of the physics unit requires specialized knowledge and skills which are not available in the DSN repair facility as yet, so development personnel normally will travel to the field station to make repairs of items inside the vacuum housing. All other repairs and maintenance will be handled in the normal manner.

The most lengthy portion of a maintenance task is the time necessary for the maser to reach thermal equilibrium after reassembly is completed and vacuum pumping is resumed. If the inner oven can remain on during maintenance (as in replacement of ion pump elements, hydrogen source assembly, palladium valve, Pirani gauge, or any electronics assemblies), long term stability is obtained a few days after initial vacuum pumpdown. If, on the other hand, the vacuum housing must be opened, then the inner oven must be baked out at elevated temperature during pumpdown, and 4 to 5 weeks are required to obtain normal long term stability (use of autotuner can possibly reduce this time).

Life Expectancy

A number of physics components have displayed limited life expectancy in the past, and efforts to increase these figures have been a continuing goal. One purpose of the two experimental masers operating at Goldstone has been to evaluate the operating life of various components which are destined for use in the DSN maser. The results of these tests are described below:

At JPL, quartz storage bulbs are prepared by applying a single coat of FEP/TFE teflon mixture. After coating, they have not shown degradation as a function of time or number of exposures to air. The bulbs in the two experimental masers have each accumulated five years of operating time (and numerous exposures to air) with no noticeable

degradation and no recoating necessary.

The hydrogen glow discharge bulbs in the two experimental masers have been operating 4 1/2 years and 1 1/2 years respectively since last cleaning. These bulbs have been exposed to air during many periods of maser modification and maintenance.

The palladium valves and copper plated RF cavities in the experimental masers have not shown degradation in 5 years of operation.

Ion pump lifetime is calculated to be 3 years for the present output level of -88 dBm. The experimental masers have logged 2 1/4 and 1 3/4 years respectively.

Reliability

The single DSN maser now in the field has experienced two failures. Immediately after installation, electrical vacuum feedthru seals, which rely on epoxy for the seal bonds, developed vacuum leaks. Temperature cycling of other units proved these seals to be unreliable. New non-magnetic seals of tungsten-glass and alumina are now being evaluated to solve this problem. Also, a matching capacitor in the glow discharge RF circuitry failed. This is the first failure to occur in more than 13 years of accumulated hours among 5 units. This failure is not believed to be design-related.

ELECTRONICS RACK

The power, control, receiving, synthesis, status, and alarm functions are provided by the electronics rack (Fig. 3) which contains 32 pre-calibrated plug-in assemblies that can be easily serviced by field technicians.

Physics Unit Control and Monitoring

The upper half of the electronics rack (Fig. 4) contains ten plug-in control modules and the ion pump power supply. These units provide all monitoring and control functions for the physics unit. (Two other modules in this group, "Status Indicator" and "Autotuner," will be discussed separately.) Table II lists the various functions of these modules.

Status and Alarm System

Many control modules generate alarm signals if operating parameters exceed pre-set limits. The Status Indicator module displays these alarms in three forms: 1) a dynamic indication which is on only when the alarm condition exists, 2) a "latched" indication which remains

on until a field technician notes the problem and resets, and 3) an audible alarm which is derived from the "latched" indication. The particular subsystem which is, or was, in an alarm condition is identified on the front panel.

Automatic Cavity Tuner System

The automatic cavity tuner ("Auto-tuner") uses an available station rubidium, cesium, or second hydrogen maser standard as a reference, and has a resolution of 0.004 seconds per 100 second period ($\Delta f/f = 4 \times 10^{-15}$ for 100 MHz inputs). It produces a varactor correction voltage proportional to the observed tuning error (integrated). The desired system loop gain is switch-selected and the linear drift component of either the maser or reference standard does not affect the output. The auto-tuner has the ability to ignore unusually large or "noisy" counts, and can provide an alarm of this occurrence.

It was decided that neither the maser frequency, nor the reference frequency (usually a station rubidium or cesium standard multiplied to 100 MHz) should be offset by the required 0.01 Hz necessary for auto-tuner operation. Therefore, an offset frequency generator is being developed at JPL which synthesizes, for auto-tuner use, a signal precisely 0.01 Hz offset from the standard maser 100 MHz output. It is expected that this will be accomplished without significant degradation of the original frequency stability.

Additionally, the auto-tuner provides a valuable troubleshooting and monitoring capability to the station since it can be used off line to measure frequency stability (at τ = 100 seconds) between any two 5 MHz or 100 MHz inputs.

Phase-Lock Receiver

The triple-conversion phase-lock receiver consists of 18 standard DSN modules in the lower half of the electronics rack and the modified Dana synthesizer at the top of the rack. The synthesis section provides 24 standard outputs ranging from 0.1 MHz to 1400 MHz at 13 dBm and 70 to 100 dB isolation. The output frequencies are adjustable over a range of $\pm 2 \times 10^{-7}$ with a resolution of 7×10^{-18}. Other specifications are listed in Table II.

Reliability

Major electronics failures during DSN maser production have occurred in three commercial components: the high resolution synthesizer, the 1400 MHz multiplier, and the ultra-stable low voltage power supplies. These problem areas have been dealt with by 1) JPL redesign and

testing assistance to the manufacturer, 2) JPL quality assurance and source inspection, and 3) a 2000 hour burn-in to aid in establishing a high confidence level.

PERFORMANCE

Frequency stability measurements for the early experimental hydrogen masers, and for the first DSN maser (using an updated experimental maser as a reference), are shown in Fig. 5. Only two measurements have been obtained thus far for the DSN maser: 1.1×10^{-13} for $\tau = 1$ second, and 3.8×10^{-15} for $\tau = 90$ seconds. Detailed characteristics for the physics and electronics units are shown in Tables I and II.

FIELD OPERATION

The physics unit is prepared for shipment by attaching a cover to the shock-absorbing mounting base. A battery pack inside the cover supplies power to the ion pump to maintain vacuum during shipment. Since the ovens are off during shipment, normal long term stability is not achieved until four weeks after turn-on. Upon installation at the station, power is obtained from a station-wide 120 VAC uninterruptable power supply system. The electronics rack is placed with other station electronic equipments where it is monitored by field technicians on a weekly basis. The physics unit is placed some distance away in an isolated area where vibration and magnetic interference are under control.

PLANS, PRESENT AND FUTURE

At the present time, the two experimental hydrogen masers continue to operate at Goldstone, California. The prototype DSN maser has been operating at the DSS 43 64-meter station near Canberra, Australia since December 1975. A second DSN maser was just completed and is undergoing testing at JPL. In 1977, it will replace the experimental maser located at the DSS 14 64-meter station at Goldstone. A third maser will be built and shipped to the remaining 64-meter station near Madrid, Spain (DSS 63) in late 1977. The second experimental maser (updated), which is mounted in a trailer, will continue to be used as a portable maser system available to all Goldstone stations.

Presently the DSN has committed hydrogen masers for use in the Jupiter/Saturn outer planet missions, Very Long Baseline Interferometry (VLBI) experiments, portions of the current Viking mission, and station time-sync calibrations. Each hydrogen maser installation will have an auxiliary back-up standard consisting of a modified, high performance Hewlett-Packard 5061A Cesium Standard. Each DSN hydrogen maser/cesium pair will interface with a microprocessor-based monitor and control

system. This system will monitor many operating parameters of both standards, periodically measure stability between the two standards, and make an automatic phase-coherent switchover (with time loss $\leq$ 10 nanoseconds) to the back-up standard in the event the on-line standard degrades beyond pre-programmed limits.

ACKNOWLEDGEMENT

The authors wish to make a special acknowledgement to Hubert Erpenbach, recently retired. Mr. Erpenbach was responsible for the successful solution of many physics problems, including the quartz bulb coating technique, RF cavity plating technique, and the long life hydrogen source asembly.

REFERENCE

1. C. Finnie, R. Sydnor, and A. Sward, "Hydrogen Maser Frequency Standard," in Proc. 25th Annual Symposium on Frequency Control, pp 348-351, April 1971.

TABLE I. PHYSICS UNIT CHARACTERISTICS
(nominal unless otherwise stated)

UNLOADED CAVITY Q	55,000 min.
LOADED CAVITY Q	35,000
CAVITY	Copper plated Cer-vit cylinder with aluminum end plates and 250 gram quartz storage bulb
DISSOCIATOR POWER	125 MHz, 4 watts ave., 18 watts max.
COLLIMATOR	400 hole, 50 micron diameter per hole
BEAM SHUTTER	1 mA taut-band meter movement
STATE SELECTOR	Hexapole permanent magnet, Alnico 8
ATOMIC LINE WIDTH	2 Hz
CAVITY POWER OUTPUT	-89 dBm min.
SIGNAL TO NOISE RATIO	84 dB/Hz
ION PUMP CAPACITY	200 liters/second
ION PUMP POWER INPUT	4200 volts @ 2.4 mA
HYDROGEN PRESSURE	1×10^{-6} Torr
VACUUM BACKGROUND	1×10^{-7} Torr
HYDROGEN SUPPLY	2.25 liters @ 1250 psig initial pressure
DC MAGNETIC FIELD	500 microgauss
MAGNETIC SHIELDS	Quantity 4 Shielding Factor (dc) 1000
FIELD WINDINGS	One main, two trim, 0 to $\pm$ 10 mA
CAVITY TUNING	Type
Coarse	Mechanical 2.4×10^{-10}/turn 20 turns
Medium	Mechanical 1.5×10^{-11}/turn 20 turns
Fine	Varactor 2.0×10^{-12}/volt 10 volts max

TABLE II. ELECTRONICS UNIT CHARACTERISTICS

1.420405751 GHz Three-Conversion Phase-Lock Receiver

BANDWIDTH	Preselector	30 MHz
	20. 4 MHz I.F.	4 KHz
	Loop (2nd order)	100 Hz
INPUT SIGNAL LEVEL FROM PHYSICS UNIT	maximum	-71 dBm
	nominal	-90 dBm
	minimum	-110 dBm
GAIN CONTROL	manual	39 dB
	automatic	20 dB
VCO FREQUENCY		100 MHz
NOISE FIGURE		4.0 dB
STABILITY ($\pm$ 5°C AMBIENT)		6×10^{-16}
1.42 GHz PHASE NOISE		5×10^{-6} radians RMS/Hz (10 Hz off-set)
AGC AM to PM CONVERSION		0.16°/dB

PHYSICS UNIT MONITOR AND CONTROL

FRONT PANEL CONTROLS	Palladium valve temperature Hydrogen discharge RF power level Beam shutter attenuation Magnetic field coil currents Varactor voltage (manual mode)
QUANTITIES CONTINUOUSLY DISPLAYED	Ion pump current, voltage Hydrogen discharge forward and reflected power Varactor voltage (dial calib.) Magnetic field coil currents (dial calibration) Maser output power
QUANTITIES AVAILABLE FOR DISPLAY ON MULTI-FUNCTION DIGITAL METER	Pirani gauge output level Oven currents Palladium valve heater current Beam shutter current Field currents

TABLE II (Continued)

QUANTITIES AVAILABLE TO REMOTE MONITOR AND CONTROL SYSTEM VIA REAR PANEL CONNECTOR	All above plus: Oven monitor thermistor outputs Power supply voltages Etc.
OTHER FUNCTIONS	Palladium valve "open loop" (manual control) or "closed loop" (controlled by Pirani gauge) Varactor diode "manual" (front panel digital control) or "automatic" (controlled by Auto-tuner) Automatic turn-off of ion pump and/or palladium valve if certain potentially damaging failure modes occur

STATUS INDICATOR AND ALARM

Status and alarm system powered by self contained uninterruptible power supply (UPS) system.

UPS DURATION	12 hours
TRANSIENT SUPPRESSION DELAY	4 msec, up to 10 sec for some parameters
ALARM OUTPUTS	Audio, visual, and remote
MAIN ALARM OUTPUT	Green - operational Yellow - operational but degraded Red - non-operational
SUBSYSTEMS AND FUNCTIONS MONITORED	Receiver lock Synthesizer lock I.F. level Hydrogen glow discharge VSWR and temperature Hydrogen source pressure Oven temperatures Ion pump power Auto-tuner

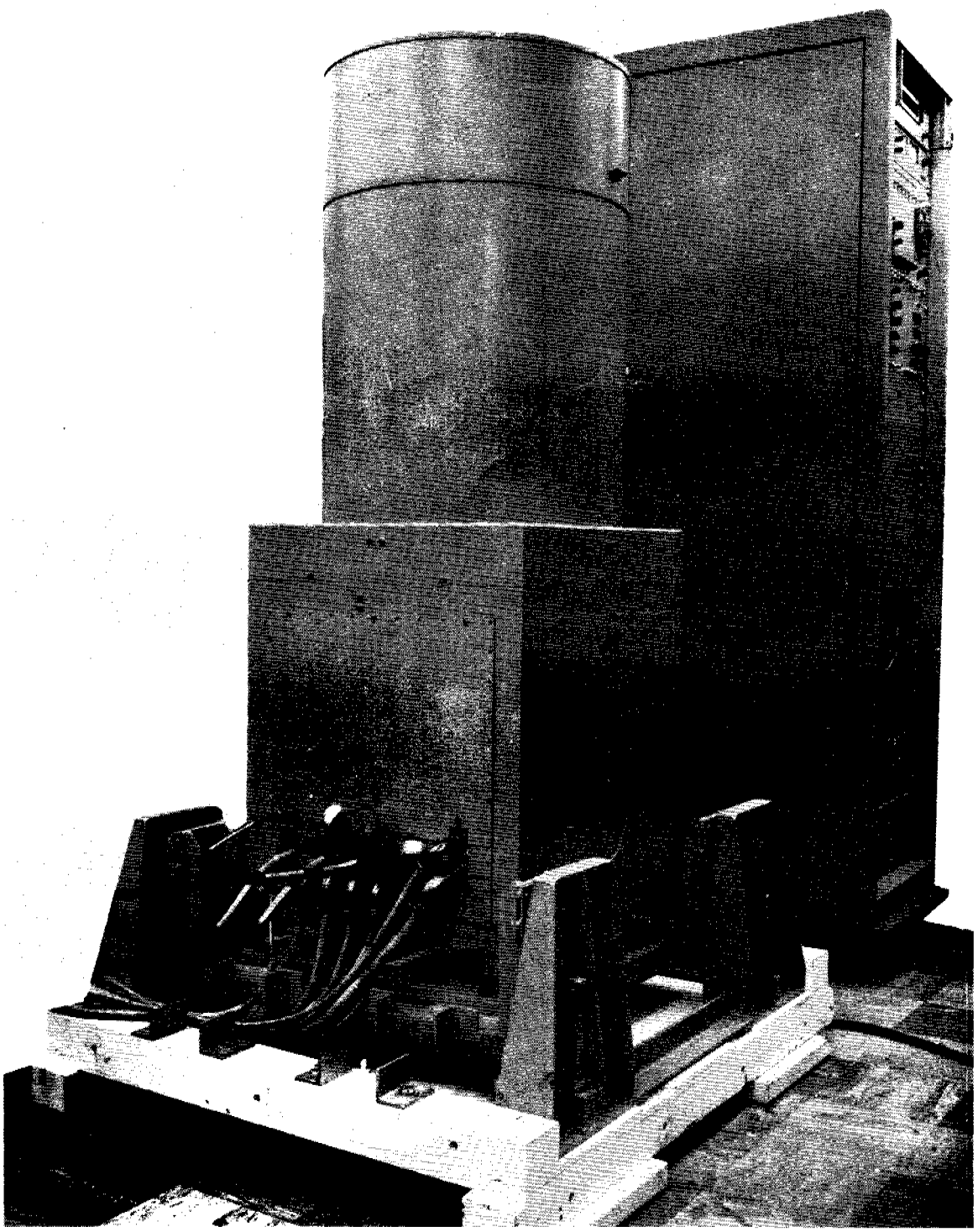

Figure 1. DSN Hydrogen Maser

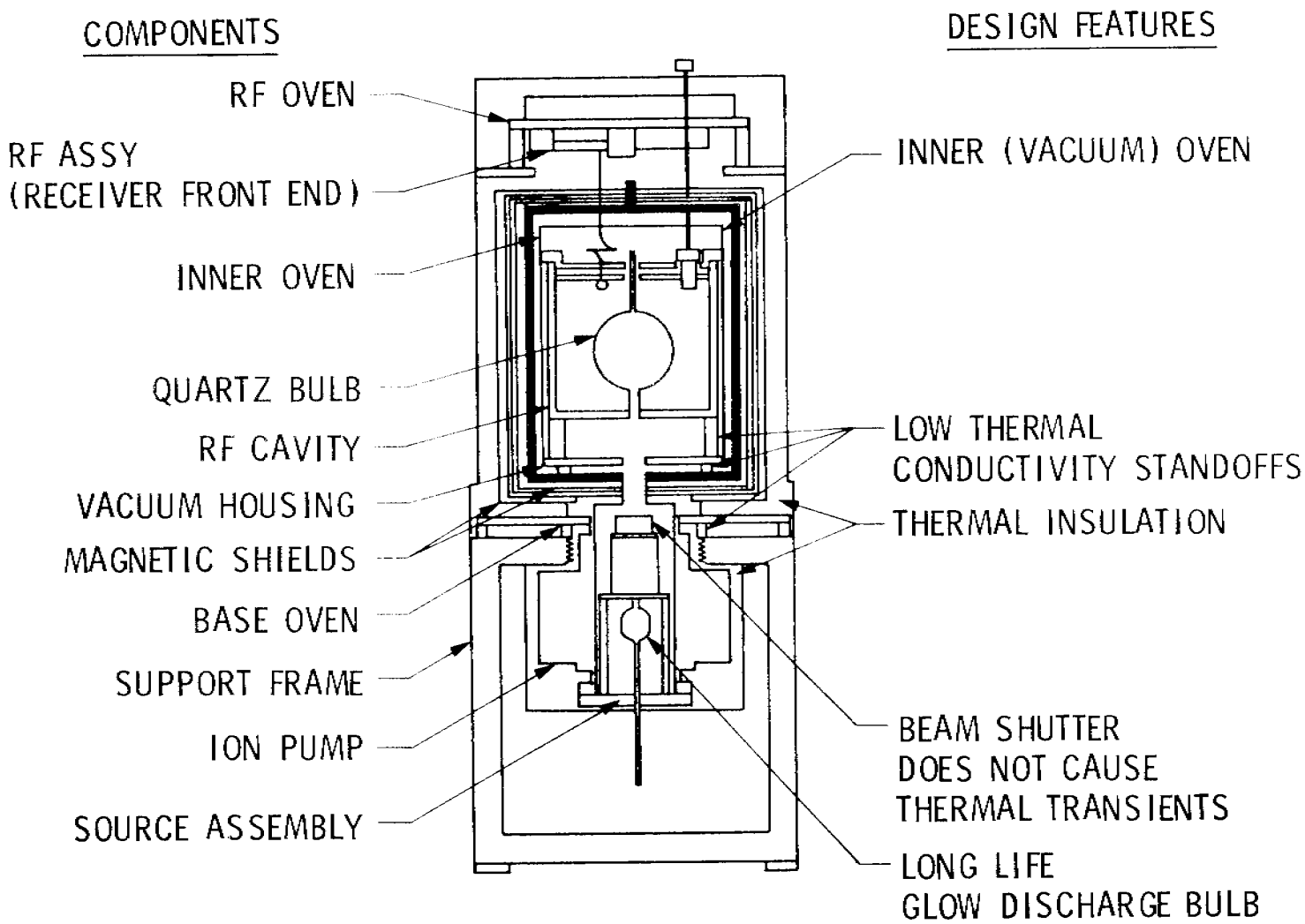

Figure 2. Simplified Cut-away View, Physics Unit

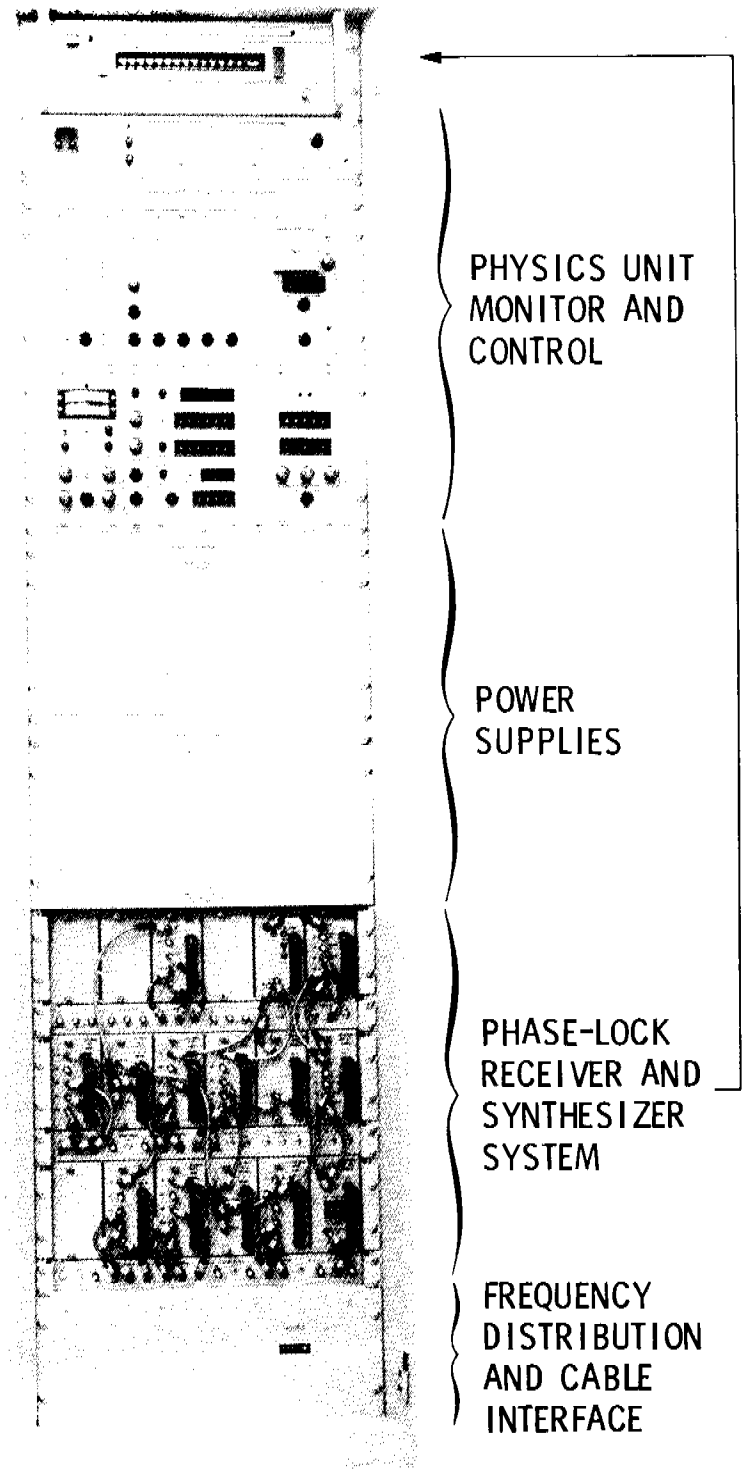

Figure 3. Electronics Rack

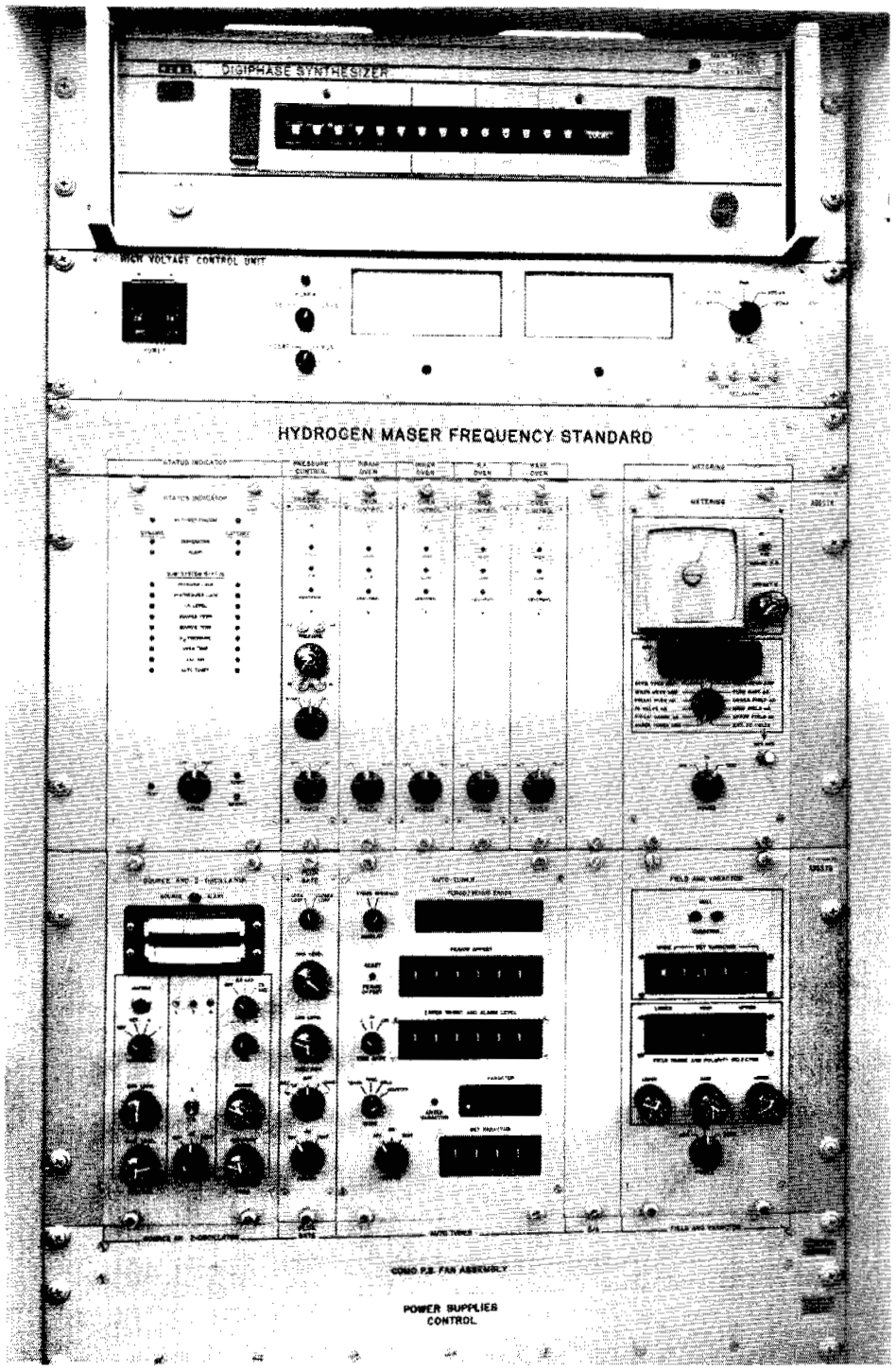

Figure 4. Physics Unit Control Panel, Electronics Rack

JPL HYDROGEN MASER FREQUENCY STABILIZATION

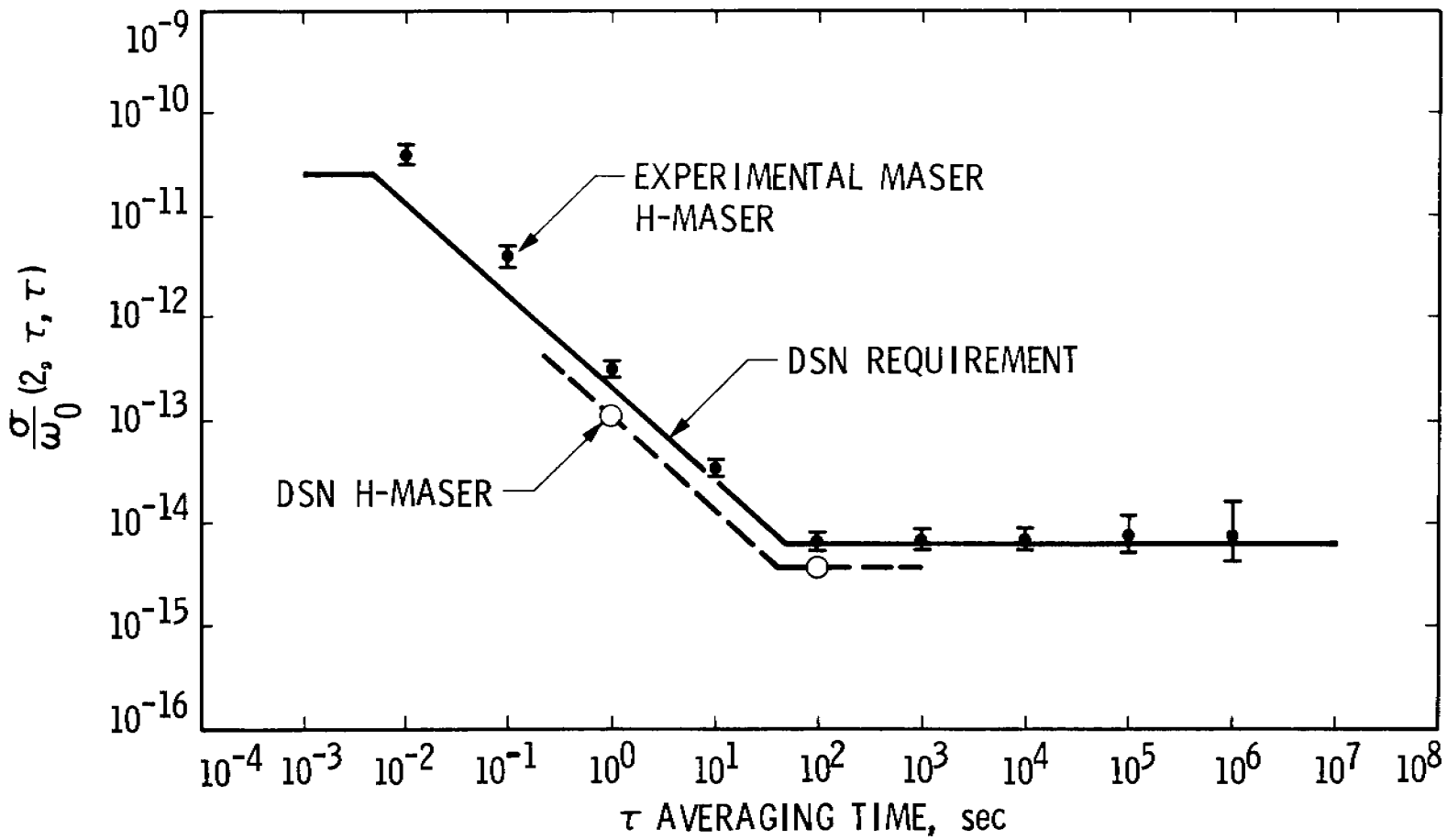

Figure 5. JPL Hydrogen Maser Frequency Stability

LIST OF FIGURES

1. DSN Hydrogen Maser.

2. Simplified Cut-away View, Physics Unit.

3. Electronics Rack.

4. Physics Unit Control Panel, Electronics Rack.

5. JPL Hydrogen Maser Frequency Stability.