A HYDROGEN MASER DESIGN FOR GROUND APPLICATIONS

M. W. Levine, R. F. C. Vessot, E. M. Mattison, E. Blomberg,
T. E. Hoffman, G. Nystrom, D. F. Graveline, R. L. Nicoll,
C. Dovidio, and W. Brymer, Smithsonian Astrophysical Observatory

ABSTRACT

A new hydrogen maser for ground-based applications has been designed at the Smithsonian Astrophysical Observatory. The mechanical, thermal, and electronics design philosophy of the VLG-11 series is described, and comparisons with previous SAO masers are detailed. The VLG-11 masers incorporate many of the lessons learned during the redshift rocket-flight program, in which a rugged, reliable, lightweight hydrogen maser was successfully operated after being boosted to an altitude of 10000 km by a Scout rocket. Preliminary test data and projections of stability performance are included, as well as photographs of the maser system during the construction phase.

THE EVOLUTION OF THE NEW VLG-11 MASERS

The design of the Smithsonian Astrophysical Observatory (SAO) ground masers and the SAO gravitational redshift space maser is the result of an unbroken evolution of ideas that began in 1960 shortly after the invention of the maser by Kleppner, Goldenberg, and Ramsey.[1] In 1962, the National Aeronautics and Space Administration/Marshall Space Flight Center (NASA/MSFC) sponsored the development of hydrogen masers with the goal of producing a transportable self-contained device to serve as a frequency standard for ground-based operation.[2,3] This development continued and a spacecraft design was begun, the new goal being to measure the gravitational redshift by using a 24-hour ellip-

tically orbiting payload[4] launched by a Titan 3C system. The design later evolved into the VLG-10 and 10A masers after this initial entry into the field of relativistic measurements was temporarily abandoned owing to the high cost of the program.

In 1969, the development efforts, begun at Varian Associates and continued under Hewlett-Packard at Beverly, Massachusetts, were successfully transplanted to SAO in Cambridge, where the first of a series of VLG-10 masers was built for the U. S. Naval Research Laboratory and the radio-astronomy community for use in very long-baseline interferometry. In 1970, the redshift program was revived, and the former space-borne design was now embodied in nine VLG-10 and 10A masers, three of which were to be used as ground masers for the SAO/NASA redshift experiment.[5]

The new redshift program has been enormously more demanding, in that the probe maser's weight had to be considerably less than 100 lb, in contrast with the 400-lb design for the previous program. The four-stage solid-fuel Scout rocket system, when separated from the fourth stage, has the ability to loft a 200-lb payload to 10000 km. This would provide a total time aloft of 2 to 3 hours and would attain a predicted redshift of some 4 parts in 10^{10}, 60% of the redshift available from the earth's gravity.

The flight maser was required to survive the trauma of a rocket launch and to operate within specifications immediately following burn-out. The qualification model was therefore subjected to an intensive series of shock, acoustic, vibration, spin, and magnetic-field tests. During 9 months of testing, the probe maser was operated practically without interruption in preparation for its successful 2-hour mission in space, which took place June 18, 1976.[6] Obviously, a complete rethinking of the space-maser design was necessitated, particularly because of the low weight and the very stringent mechanical constraints imposed by the Scout rocket system.

Again, as had previously occurred, many aspects of the design of the space maser found their way into the new design for the ground maser, now designated as the VLG-11. In particular, the vexing problem of RF dissociator failure that plagued the VLG-10 design in its early days has been rectified by using the probe-maser dissociator design. This design has been retrofitted to eight out of the nine VLG-10s now in use. The remaining one, having been in continuous operation since 1973, will be refitted in July 1977 as part of its modification to the VLG-10A configuration.

Another mysterious and equally vexing design problem with the VLG-10 has been the effect of barometrically induced stress on the cavity resonator[7] through the motion of the bell-jar base. In 1974, the problem was rectified and by July 1977, all but two of the nine VLG-10 masers now in use will include the appropriate modifications. The VLG-11 series incorporates the mechanically rugged cavity designed for the flight maser, as well as the barometric-isolation system used in the VLG-10A masers.

DESIGN PHILOSOPHY OF THE VLG-11

The VLG-11 is housed in the same 22" x 30" x 52" cabinet used for the VLG-10 masers. The device is intended to be a stand-alone system, requiring 24 to 30 volts DC to operate and providing output frequencies at 60, 5, and 1 MHz. This package weighs 650 lb, is mounted on casters, and requires no special handling nor transportation facilities. Normally the package can be shipped cold if the time between available power is less than about 3 days. For longer times of transit or storage, a stand-by power supply for the ion pump is recommended.

The design emphasizes extreme ruggedness and mechanical stability, especially for the very critical cavity-bulb assembly, in order for the

maser to withstand high levels of shock and vibration during shipment without requiring cavity tuning. In addition to rugged construction, the cavity is made of CER-VIT,* a material of unbeatable dimensional stability and long-term resistance to dimensional creep. A low thermal coefficient of the cavity resonator frequency is achieved by using CER-VIT-101, with a thermal coefficient of 2 to 5 x 10^{-7}/°C. The major remaining contribution to thermal mistuning of the cavity has been found to be the temperature coefficient of the dielectric constant of the quartz storage bulb within the resonator. A typical value for the resonator-bulb combination for the VLG-10 series is

$$\frac{1}{f}\frac{\Delta f}{\Delta T} = -1000 \text{ Hz/°C}$$

By reducing the thickness of the bulb (but maintaining the stiffness-to-weight ratio), we have

$$\frac{1}{f}\frac{\Delta f}{\Delta T} = -300 \text{ Hz/°C}$$

for the VLG-11 series masers without having to use any differential compensating mechanism that might be vulnerable to temperature gradients. By having intrinsically passive thermal stability in the most sensitive components, we believe we can then use thermal-control techniques effectively and thereby provide exceptional thermal stability for long periods of time. Figure 1 shows the cavity-bulb assembly for the VLG-11 maser.

Provisions are made for using an autotuner, which is highly recommended if tuning is to be done in the field by personnel who are inexperienced with hydrogen masers or if mechanical and thermal environmental circumstances are severe enough to require relatively frequent retuning.

---

* ®Owens-Illinois.

PHYSICS PACKAGE DESIGN

In order to describe the design evolution from the VLG-10 and 10A masers to the VLG-11 maser, we present a series of sketches, starting with the inner cavity-bulb assembly. It will be seen that the differences are chiefly in the direction of more rugged structural and more careful thermal design and better magnetic shielding. The two major departures of the VLG-11 from either the VLG-10 or the space-probe maser are the lightweight bulb and the torrispherical magnetic shields.

Figure 2 describes the cavity-bulb assembly, including the output coaxial line and the isolator; the latter is properly part of the cavity resonator. Figure 3 shows the cavity structure and outlines the major load paths. Possible cavity-stress changes owing to the expansion coefficient of the external cylinder holding the cavity together are taken up by the Bellville washer. Similar thermally induced radial stress in the base is relieved by the rollers. Strains on the bell jar owing to barometric-pressure change are isolated from the cavity by the double-base structure.

The magnetic-shield oven assembly surrounding the ball jar is seen in Figure 4. Here the VLG-11 differs greatly from the VLG-10 and 10A, in that torrispherical shields have foam-glass insulation at their ends for support. These shields are under far less local stress than are the flat-ended outer shields and have much improved lapped joints at the lower cover (the upper cover is not removable). Figure 5 shows the magnetic shields. The VLG-11 solenoid follows the design used in the probe even though it is considerably larger in size. The multilayer printed-circuit design allows very complete cancellation of spurious magnetic fields and provides a rugged, close-fitting, and simple coil system located immediately inside the innermost magnetic shield. Figure 6 shows the VLG-11 solenoid.

Figure 7 illustrates the thermal-control system. Design experience with the space maser has shown us that temperature gradients are a problem that can be solved by including separate zones of thermal control for the bell jar and the oven. In addition, the pump-dissociator assembly is also controlled so as to stabilize the RF lines, the dissociator, and the isolator; this last item is located within the pump shields along with the temperature-sensitive electronics systems. The pump-dissociator assembly is temperature controlled by means of recirculated temperature-controlled air from a heat-added system and a heat exchanger, at the rear of the cabinet, that dumps unwanted heat to the ambient environment. Maximum added power of 14 watts is required to operate this system over an ambient-temperature range of 20° to 30°C.

The ion-pump manifold and the dissociator/state selector for the VLG-10, 10A, and 11 masers are shown in Figure 8. The source glassware for both items follows the space-maser design. The chief differences between this design and the initial VLG-10 design include the size of the dissociator glassware and the layout of the RF coil. Ever since these modifications were made, we have had no recurrence of dissociator failure. We believe that the improvement is the result of the change in dissociator size, from 1" diameter × 1.4" long to 1.4" diameter × 2" long, which increases the volume by a factor of 3. These dimensions coincide almost exactly with those used with excellent success by the Jet Propulsion Laboratory maser group. The ion-pump manifold and neck assembly is shown in Figure 9.

The VLG-11 RF oscillator includes a voltage regulator and an RF-level monitor. The condition of the discharge color's brightness, determined by studying the relative strengths of the atomic hydrogen Balmer-α (6562 Å) red line and an adjacent molecular-band spectrum, provides a measure of the dissociator efficiency.

DESIGN OF THE VLG-11 ELECTRONICS

All the electronics systems for the VLG-11 masers are of new design in both their circuitry and their packaging. Design aspects of particular significance are discussed in the following sections.

Phaselock Receiver

An RF preamplifier, immediately following the isolator, has been incorporated into the VLG-11 receiver. The noise figure of the amplifier is less than 5.0 db, which compares very favorably with the 10.0-db noise figure at the balanced-mixer input of the earlier VLG-10 receivers. The preamplifier is temperature controlled within the isolator enclosure to help stabilize the input impedance so as to present a more constant impedance at the isolator output.

A first IF frequency of 340 MHz has been selected to permit the use of a low-Q image-rejection filter at the input to the first mixer. This filter removes the noise contribution at the image frequency and further improves the effective noise figure of the receiver.

The output frequency of the master crystal oscillator at the receiver is 60.0 MHz, which is multiplied to 1080 and 360 MHz for the first and second local-oscillator frequencies, respectively, and divided to 20, 5, and 1.0 MHz for the third local-oscillator frequency and for utility outputs. Buffered isolated outputs are provided at 360, 60, 5.0 (two independent outputs), and 1.0 MHz.

The upper unit in Figure 10 is the receiver package, shown mounted into the maser frame. The large square box in the right center of the receiver is the oven-controlled multiplier-divider assembly. The IF amplifier, buffer amplifiers, and phaselock circuits are located in the shielded plug-in modules to the left of the oven.

Digital Synthesizer

The digital synthesizer for the VLG-11 maser has been specifically designed for maser applications. It is tunable from 405750.000 to 405753.999 Hz in discrete steps of 0.001 Hz. The synthesizer concept combines both direct and indirect synthesis techniques. The four tunable digits are generated by divide-by-N phaselock loops, which are carefully designed to minimize spurious outputs. All reference carrier frequencies are 5 kHz or greater to simplify the problem of suppressing reference-frequency modulation of the loop's voltage-controlled oscillator.

All the digital logic within the synthesizer is CMOS, offering the twin advantages of very low power consumption and freedom from switching transients. The highest internal frequency within the synthesizer is 5.0 MHz, the clock signal. The absence of high-frequency signals simplifies circuit-board and backplane wiring and permits the use of card extenders for servicing.

The digital synthesizer requires approximately 6 watts at +28 volts for operation and can be operated directly from an emergency battery system. The short-term stability of the synthesizer has been measured at 4×10^{-13} for a 100-sec Allan variance, which corresponds to an overall maser-system contribution of approximately 1.2×10^{-16} at 100 sec. It should be noted that these stability measurements indicate only an upper bound — instrumental limitations establish a noise floor at about 1×10^{-13} for our measurements at 405 kHz.

Figure 10 shows the mechanical packaging of the synthesizer, directly below the receiver unit. Five of the seven individually shielded printed-circuit boards are shown installed. Each shielded module can be operated on a board extender to facilitate troubleshooting and servicing.

Maser Control Systems

Exhaustive thermal testing of the probe maser clearly demonstrated that thermal gradients along the vacuum tank are the primary contributor to the ambient-temperature sensitivity of the maser cavity. Increased thermal gain or improved preamplifier stability alone is ineffectual in attacking this problem; however, division of the tank (and oven) surface into independently sensed and controlled zones has shown itself to be a powerful technique for minimizing gradient problems. Accordingly, the vacuum tank is divided into three zones — dome, cylinder, and base — each of which has its own sensing thermistor, amplifiers, and heater windings. Each zone can respond independently to external thermal loads without materially affecting the temperature of other zones. To minimize the thermal stress on the vacuum-tank controllers, the oven is divided into a dome-cylinder zone and a base zone; each of these is independently controlled. The isolator-preamplifier box is a separate thermal zone, making a total of six distinct thermal-control zones. The circulating air, which controls the temperature of the pump, the dissociator, and the upper maser electronics, is an entirely independent system with self-contained sensors and electronics.

Hydrogen for operation of the dissociator is furnished from a two-liter gas bottle pressurized to approximately 100 psi. The relatively low pressure permits the use of a small, thermally agile palladium valve. Hydrogen pressure within the dissociator is sensed by a thermistor Pirani gauge, which is incorporated into a resistance bridge along with an identical thermistor that senses the high-vacuum side of the pumping system. The bridge output, which is independent of ambient temperature variations to first order, drives a servo system that controls the dissociator pressure by varying the temperature of the palladium valve.

The pressure and thermal-control electronics are housed in a controller assembly mounted on the maser cabinet frame. The controller

assembly can be seen at the top of Figure 11, with one of the individually shielded printed-circuit boards plugged into the back plane. The critical preamplifiers for the three zones of the vacuum-tank heater are located within the maser physics package in the thermally controlled upper maser electronics assembly. Figure 12 shows the controller assembly swung out on its hinges. The hinge arrangement permits convenient access to the rear of the assembly for maintenance and service without interruption of power or signal.

A rear view of the maser (Figure 13), taken early in the fabrication phase, shows the power-amplifier assembly, which mounts the power transistors for the thermal and pressure controls.

Monitoring System

The VLG-11 provides front-panel analog metering for 32 functions. All metering, including eight receiver/synthesizer functions, is centralized on the monitor panel, which is visible at the top of the rack in Figure 11. LED lamps provide a quick-look indication of the status of the subsystems, while a small LED numerical readout continuously displays the four least-significant digits of the synthesizer output frequency.

In addition to the conventional panel meter with selector-switch monitoring, the VLG-11 provides an internal telemetry system. Thirty-one channels of voltage or current data are normalized to a standard 0- to +5.0-volt range, buffered, and brought out to a 61-pin cylindrical connector on the front panel. In addition, five monitoring thermistors are accessible through this connector to permit convenient measurements of vacuum tank and oven temperatures.

PERFORMANCE AND STABILITY DATA OF THE VLG-10A AND EXPECTED DATA FROM THE VLG-11 MASER

VLG-10A Data

The most critical environmental tests on VLG-10A masers published so far have been made under the direction of Dr. A. Rogers of Haystack Observatory using two VLG-10As and a Goddard NP series maser.[7] The following parameters, taken from that publication, are for the SAO VLG-10A maser serial number P-4:

Temperature:	Comments
$\frac{1}{f}\frac{\partial f}{\partial T} \sim -5 \times 10^{-14}/°C$	∿1-day time constant
Pressure:	
$\frac{1}{f}\frac{\partial f}{\partial P} < 1.7 \times 10^{-14}/''$ Hg	beyond limit of sensitivity for 0.15" Hg pressure modulation
Magnetic field:	
$\frac{1}{f}\frac{\partial f}{\partial B} \sim 1 \times 10^{-12}/\text{gauss}$	

Stability data are shown in Figure 14.

VLG-11 Data

From data obtained from tests on the VLG-11 maser during assembly, we can make the following projections about systematic effects:

A. Thermal insensitivity will be improved by a factor of at least 3, since the intrinsic thermal sensitivity of the cavity-bulb assembly has been found to be about 3 times lower, and we can also expect a considerable improvement from the thermal redesign.

B. The axial shielding factor will see an improvement by a factor of about 1.6. Our tests on torrispherical shields indicate a 40% improvement in the ratio of axial to transverse shielding for a single shield. From operating tests of the physics package of the VLG-11 maser, we observe that we can operate the maser at a field of 0.350 mgauss (500-Hz Zeeman frequency). This allows a direct two-fold improvement in magnetic sensitivity, which, combined with the improved shielding factor, should yield a net improvement by a factor of 3.

C. The modified VLG-10A cavity design exhibits a barometric-pressure sensitivity that is lower than can be measured adequately within the ambient-pressure range available at the Haystack Observatory.[7] The VLG-11 cavity structure is more rugged and better isolated than the VLG-10A, as the strain relief of the attached coaxial cables has been improved, so we expect better performance from the new design. To verify the improvement in barometric sensitivity, a special chamber is under construction at SAO to permit testing over an ambient-pressure range of +0.0 to +2.0" Hg (approximately 1 psig).

D. Improvement of the noise figure of the maser receiver/synthesizer by a factor of about 5 will result from using a preamplifier with a 5-db noise figure instead of the 13-db effective noise figure of the diode mixer in the VLG-10A system. The short-term stability in the T^{-1} portion of the Allan variance, which is associated with additive white phase noise, will be reduced by $\sqrt{5}$, or about 2.

Figure 14 shows the anticipated performance of the VLG-11 with all the above factors taken into account.

ACKNOWLEDGMENT

This work was supported in part by Contract NAS8-27969 from the National Aeronautics and Space Administration.

REFERENCES

1. D. Kleppner, H. Goldenberg, and N. Ramsey, Theory of the hydrogen maser. Phys. Rev., vol. 26, pp. 603-615, 1962.
2. R. Vessot, Frequency stability measurements between several atomic hydrogen masers. In Quantum Electronics III, ed. by P. Grivet and N. Bloembergen, Columbia Univ. Press, New York, pp. 409-417, 1964.
3. R. F. C. Vessot, H. E. Peters, and J. Vanier, Recent developments in hydrogen masers. In Proceedings of the 18th Annual Symposium on Frequency Control, U.S. Army Electronics Command, Ft. Monmouth, N.J., pp. 299-307, 1964.
4. R. F. C. Vessot, M. W. Levine, L. Mueller, and M. Baker, Design of an atomic hydrogen maser system for satellite experiments. In Proceedings of the 21st Annual Symposium on Frequency Control, U.S. Army Electronics Command, Ft. Monmouth, N.J., pp. 512-542, 1967.
5. R. F. C. Vessot and M. W. Levine, Performance data of space and ground hydrogen masers and ionospheric studies for high accuracy frequency comparison between space and ground clocks. In Proceedings of the 28th Annual Symposium on Frequency Control, U.S. Army Electronics Command, Ft. Monmouth, N.J., pp. 408-414, 1974.
6. R. F. C. Vessot and M. W. Levine, A preliminary report on the gravitational redshift rocket-probe experiment. In Proceedings of the Symposium on Experimental Gravitation, Pavia, Italy, in press.
7. A. E. E. Rogers and A. R. Whitney, A comparison of various hydrogen-maser frequency standards. In Proceedings of the Eighth Annual Precise Time and Time Interval Applications and Planning Meeting, U. S. Naval Research Laboratory (this volume).

FIGURE CAPTIONS

Fig. 1 — VLG-11 cavity-bulb assembly.

Fig. 2 — VLG-10A and VLG-11 cavity-bulb assembly.

Fig. 3 — VLG-10A and VLG-11 cavity structure and stress load paths.

Fig. 4 — VLG-10A and VLG-11 magnetic shields and oven assembly.

Fig. 5 — VLG-11 magnetic shields.

Fig. 6 — Two-sided printed-circuit solenoid for VLG-11 maser.

Fig. 7 — VLG-10 and VLG-11 thermal-control system.

Fig. 8 — VLG-10 and VLG-11 ion-pump vacuum manifold and dissociator state selector.

Fig. 9 — VLG-11 ion-pump and neck assembly.

Fig. 10 — VLG-11 receiver and synthesizer.

Fig. 11 — VLG-11 maser front view.

Fig. 12 — VLG-11 maser front view showing electronics assemblies opened for inspection.

Fig. 13 — Rear view of VLG-11 maser showing power-amplifier assembly and heat sink.

Fig. 14 — VLG-10 maser stability data and projected VLG-11 peformance. Error bars show the spread between a number of individual data sets. Crosses are for a single data set.

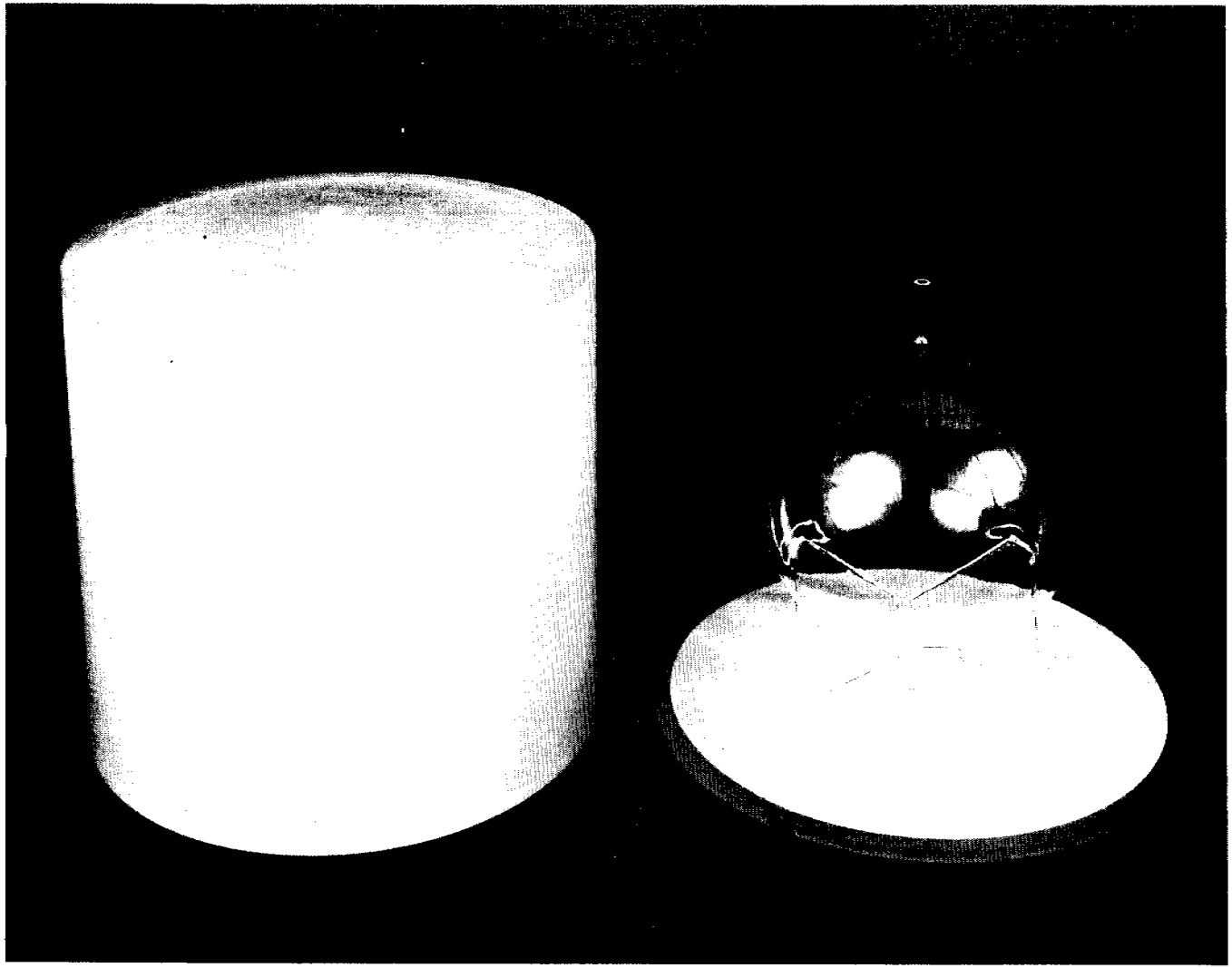

Fig. 1 VLG-11 cavity-bulb assembly.

CAVITY - BULB ASSEMBLY

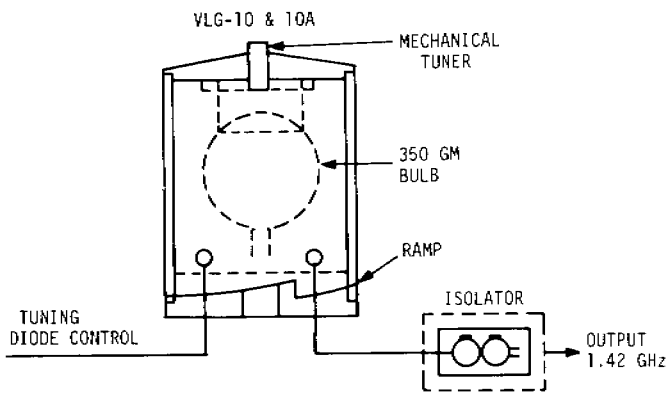

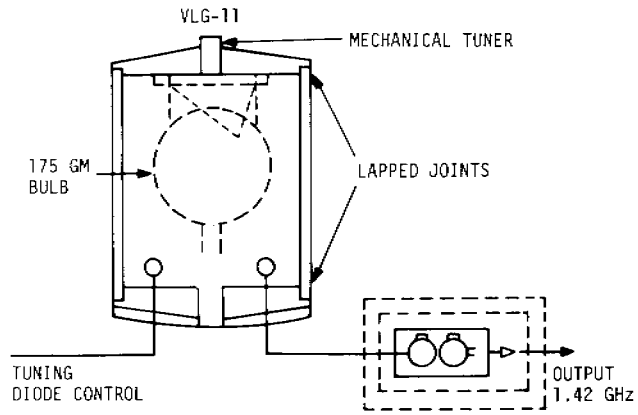

CAVITY MATERIAL CER-VIT 101

TUNABLE ON INTERRUPTED THREAD

BULB 7" SPHERE-CYLINDRICAL SKIRT MOUNTING
0.22" x 1.5" INTEGRAL COLLIMATOR

COATING FEP TEFLON
BULB WEIGHT 350 GRAMS

TUNING COARSE ~ 10 MHz
FINE (MECHANICAL) 100 KHz
ELECTRONIC 15 KHz-0.5-10V
DIODE IN LOOP

CAVITY $Q_L \sim 35{,}000$, $Q_0 \sim 45{,}000$, $\beta \sim 0.3$ LINE Q ~ 1.3×10^9

CONNECTION TO DIODE AND RF COUPLING
0.085" O.D. COAXIAL

FERRITE ISOLATOR 60 db 0.5 db LOSS
THERMALLY CONTROLLED -1 LEVEL
EXTERNAL MAGNETIC SHIELD

CERVIT-101

LENGTH CUT TO ACCOMODATE BULB

CERVIT-101

LENGTH CUT TO ACCOMODATE BULB
ENDS LAPPED OVER TOTAL CIRCUMFERENCE

7" SPHERE – TETRAHEDRAL STRUTS TO CYLINDRICAL SKIRT

COATING 0.22" x 1.5" INTEGRAL COLLIMATOR
FEP TEFLON
BULB WEIGHT 175 GRAMS

MECHANICAL TUNER 200 KHz

ELECTRONIC 7 KHz DIODE INLOOP

$Q_L \sim 42{,}000$, $Q_0 \sim 50{,}000$, $\beta \sim 0.23$ LINE Q ~ 1.4×10^9

0.070 COAXIAL LINE

60 db 0.5 db LOSS

THERMALLY CONTROLLED – 2 LEVELS
MAGNETICALLY SHIELDED

20 db AMPLIFIER N.F. 4.5 db

Fig. 2 VLG-10A and VLG-11 cavity-bulb assembly.

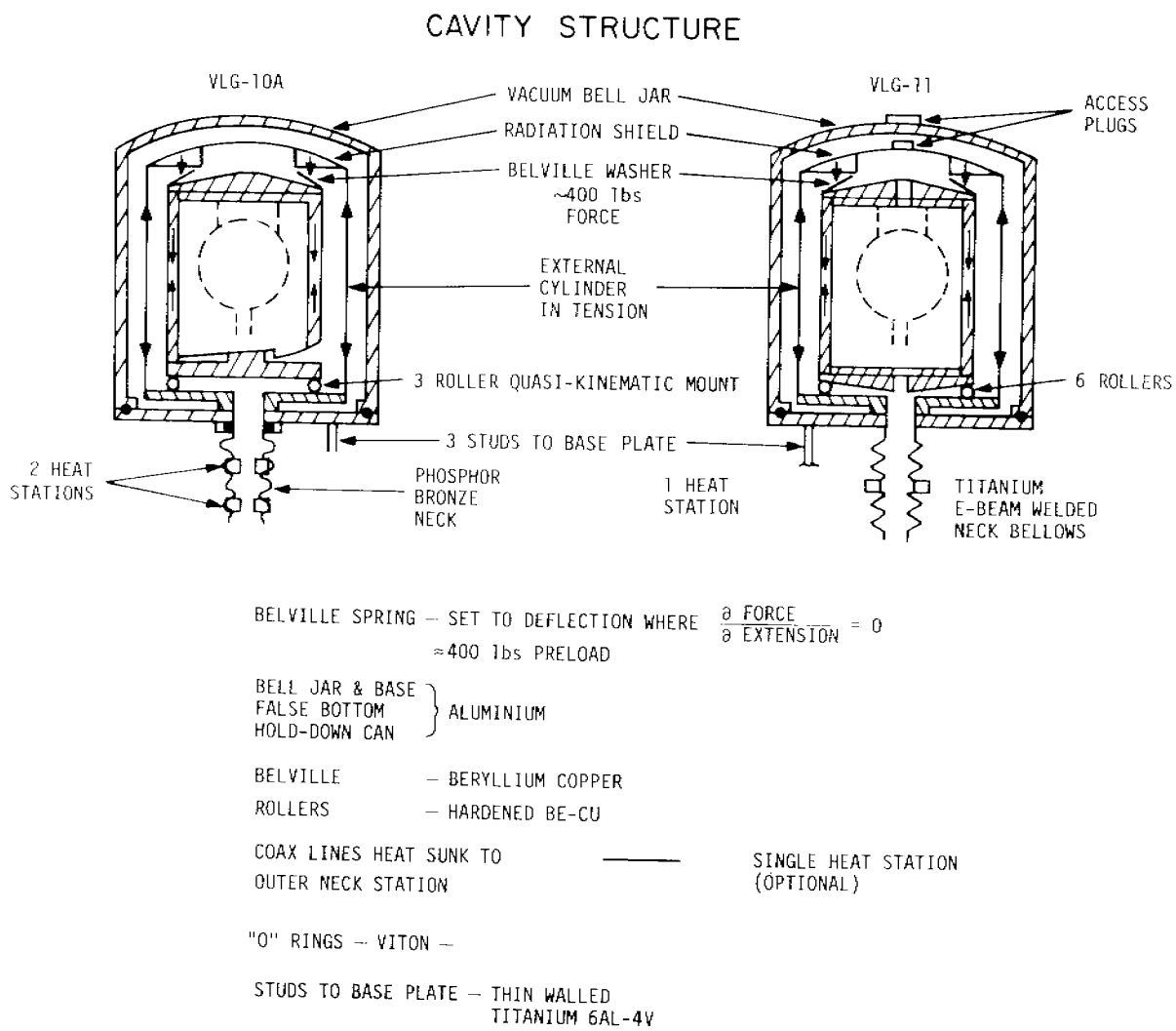

Fig. 3 VLG-10A and VLG-11 cavity structure and stress load paths.

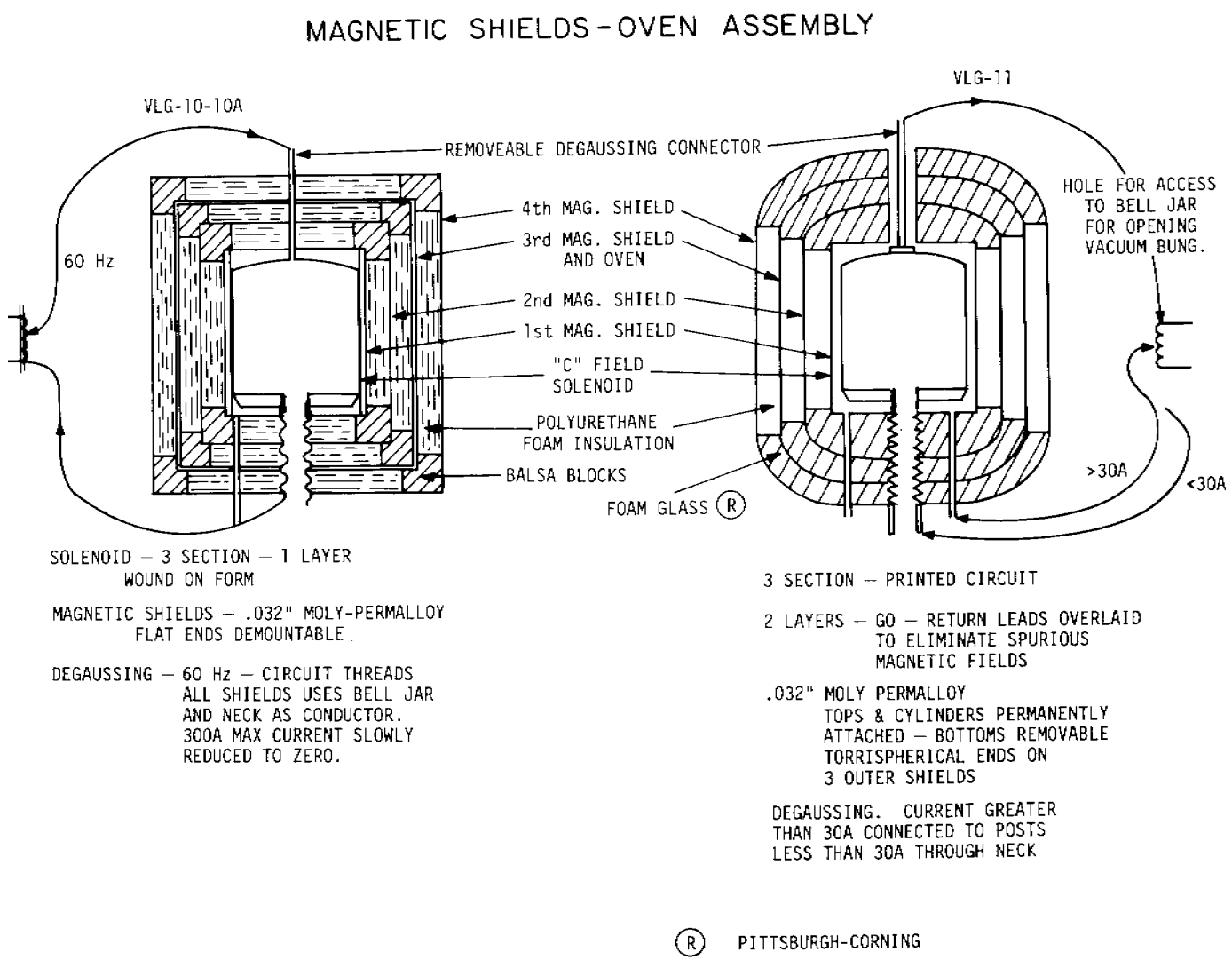

Fig. 4 VLG-10A and VLG-11 magnetic shields and oven assembly.

Fig. 5 VLG-11 magnetic shields.

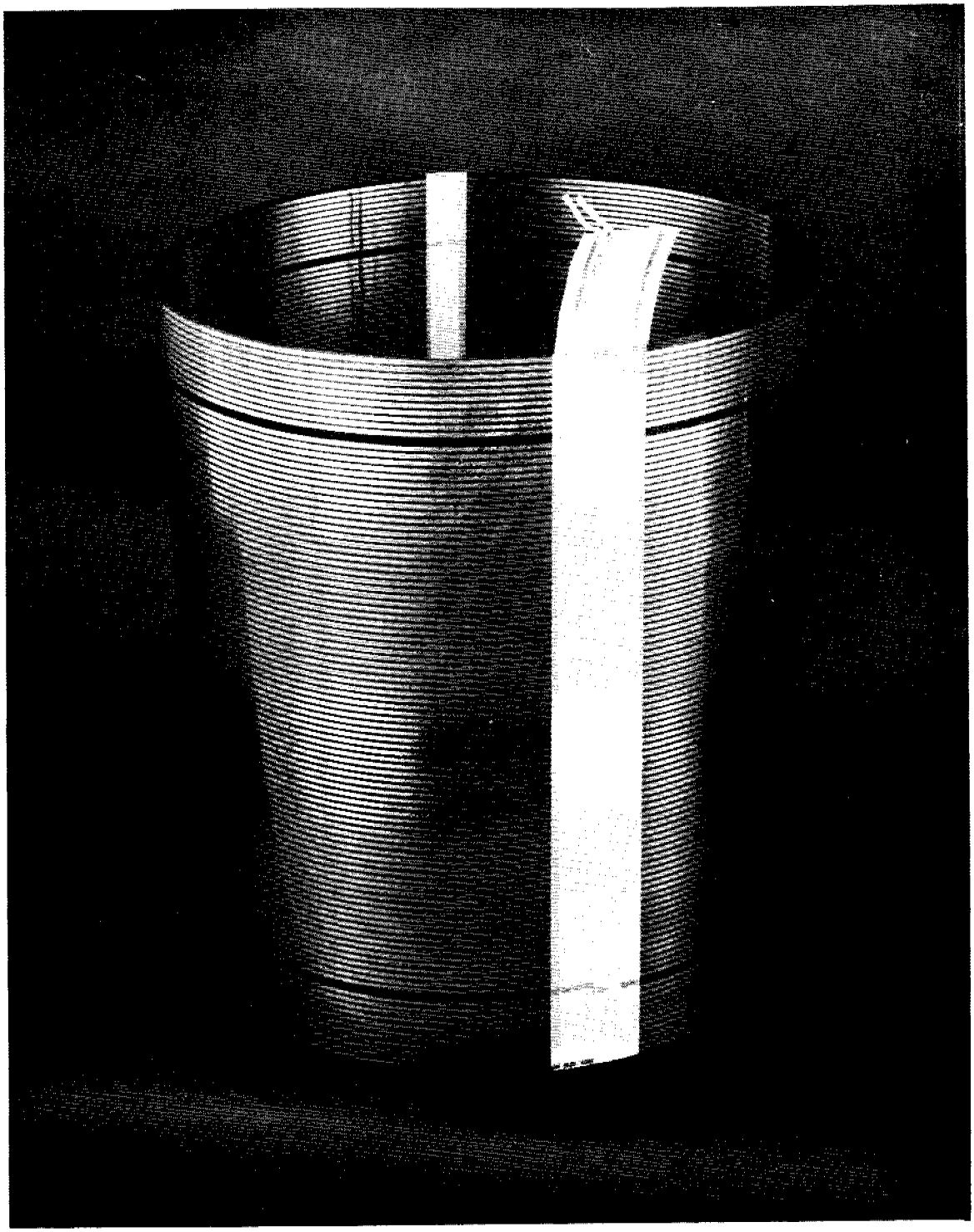

Fig. 6 Two-sided printed-circuit solenoid for VLG-11 maser.

THERMAL CONTROL

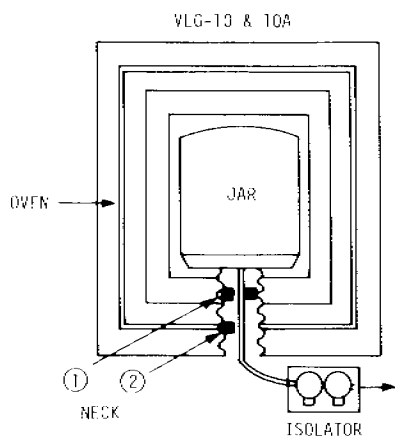

5 ZONES OF THERMAL CONTROL

LOCATION			TEMPERATURE (°C)
JAR	1 ZONE	48	± .002 STABILITY AT CONTROL THERMISTOR
OVEN	1 ZONE	38	± .05 STABILITY AT CONTROL THERMISTOR
NECK	2 ZONES	38	± .2 STABILITY AT CONTROL THERMISTOR
		48	± .02 STABILITY AT CONTROL THERMISTOR
ISOLATOR	1 ZONE	48	±.1 STABILITY AT CONTROL THERMISTOR

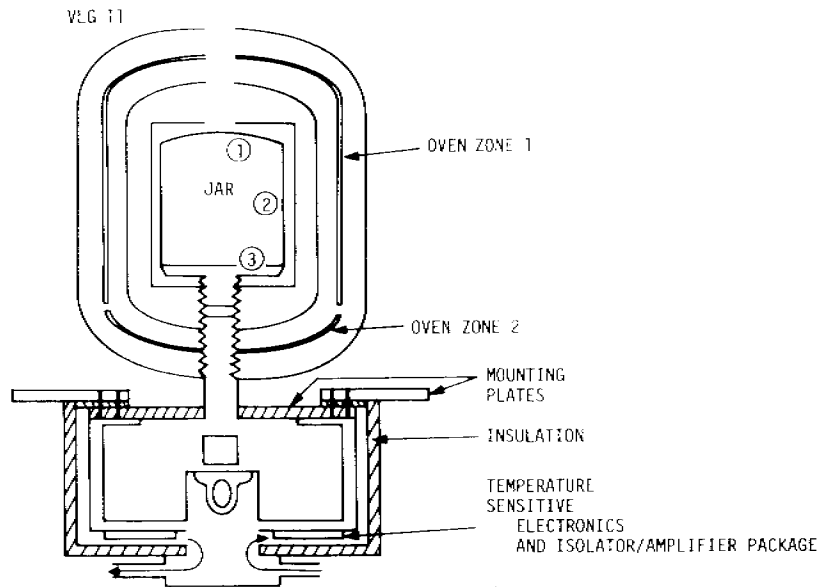

LOCATION				TEMPERATURE (°C)
JAR — END	1 ZONE	49	±	0.001° STABILITY AT EACH CONTROL THERMISTOR
CYL	1 ZONE	49	±	
BASE	1 ZONE	49	±	
OVEN — END	1 ZONE	42		± 0.05° STABILITY AT EACH CONTROL THERMISTOR
CYL				
BASE	1 ZONE	42		
NECK — OPTIONAL				
DISSOCIATOR, PUMP, ELECTRONICS, ISOLATOR/AMP.	1 ZONE CIRCULATED AIR	42		± 1° THROUGHOUT THE VOLUME
ISOLATOR/AMP.	1 ZONE (WITHIN ABOVE ZONE)			
		49		± 0.01 STABILITY AT THE CONTROL THERMISTOR

Fig. 7 VLG-10 and VLG-11 thermal-control system.

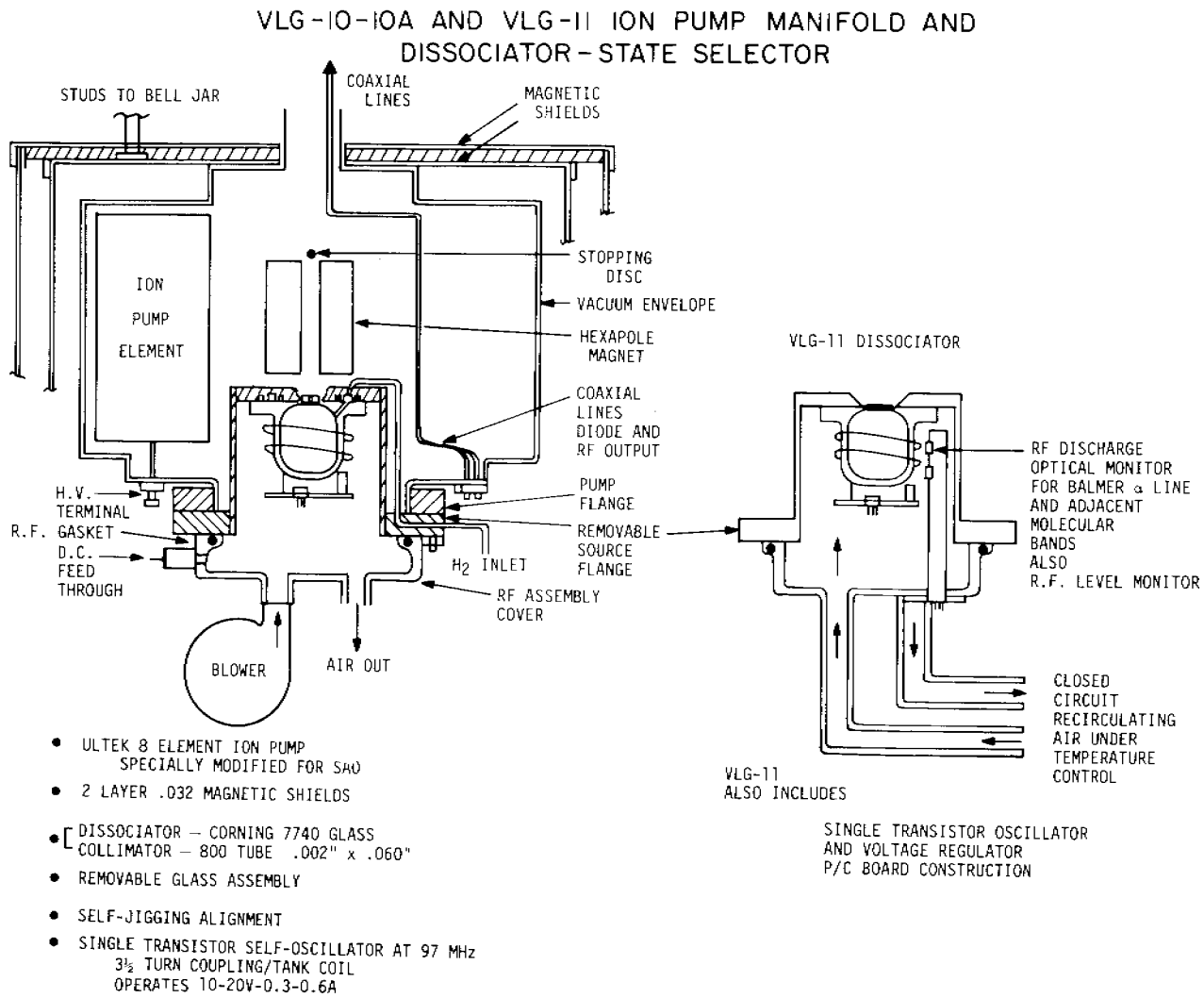

Fig. 8 VLG-10 and VLG-11 ion-pump vacuum manifold and dissociator state selector.

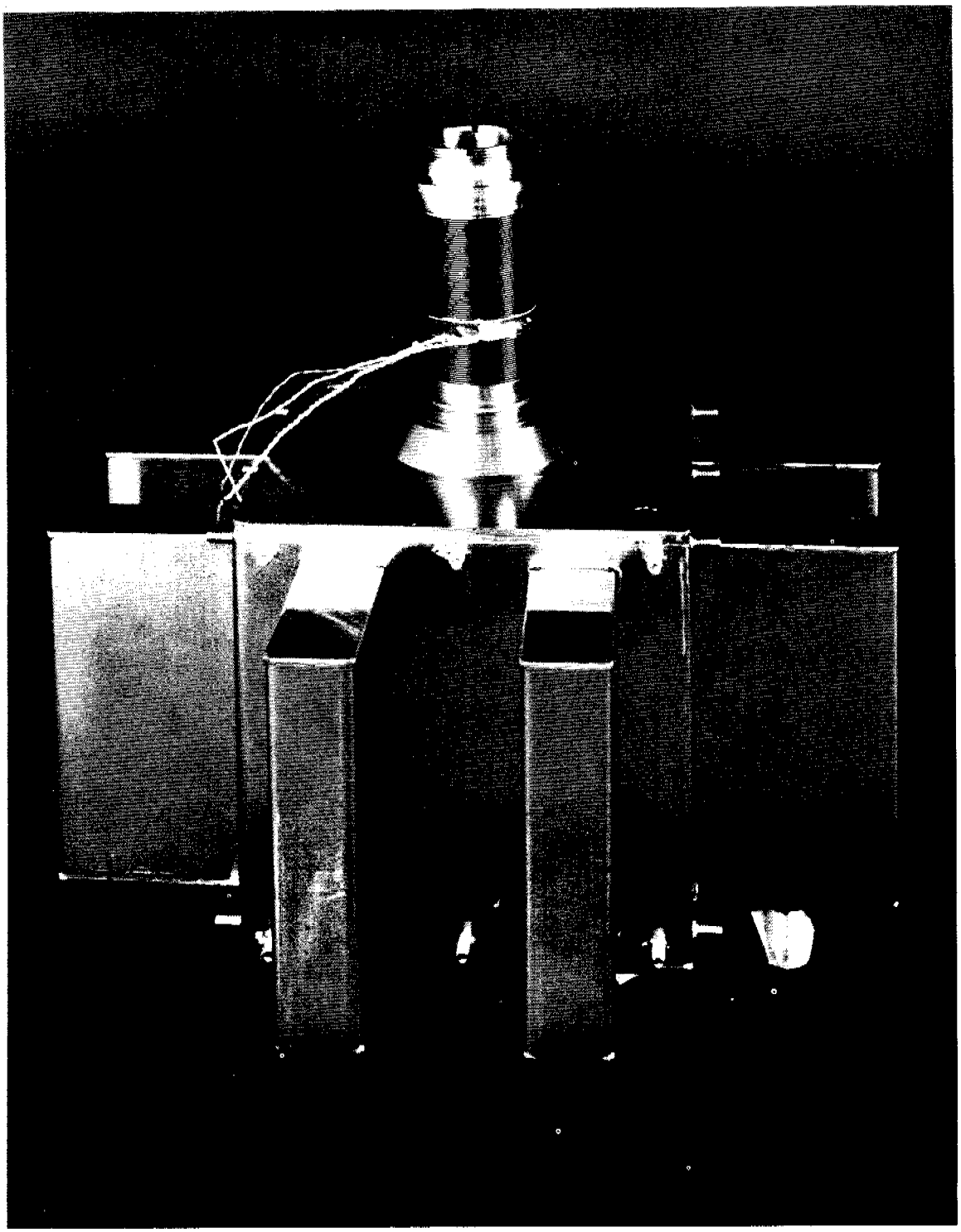

Fig. 9 VLG-11 ion-pump and neck assembly.

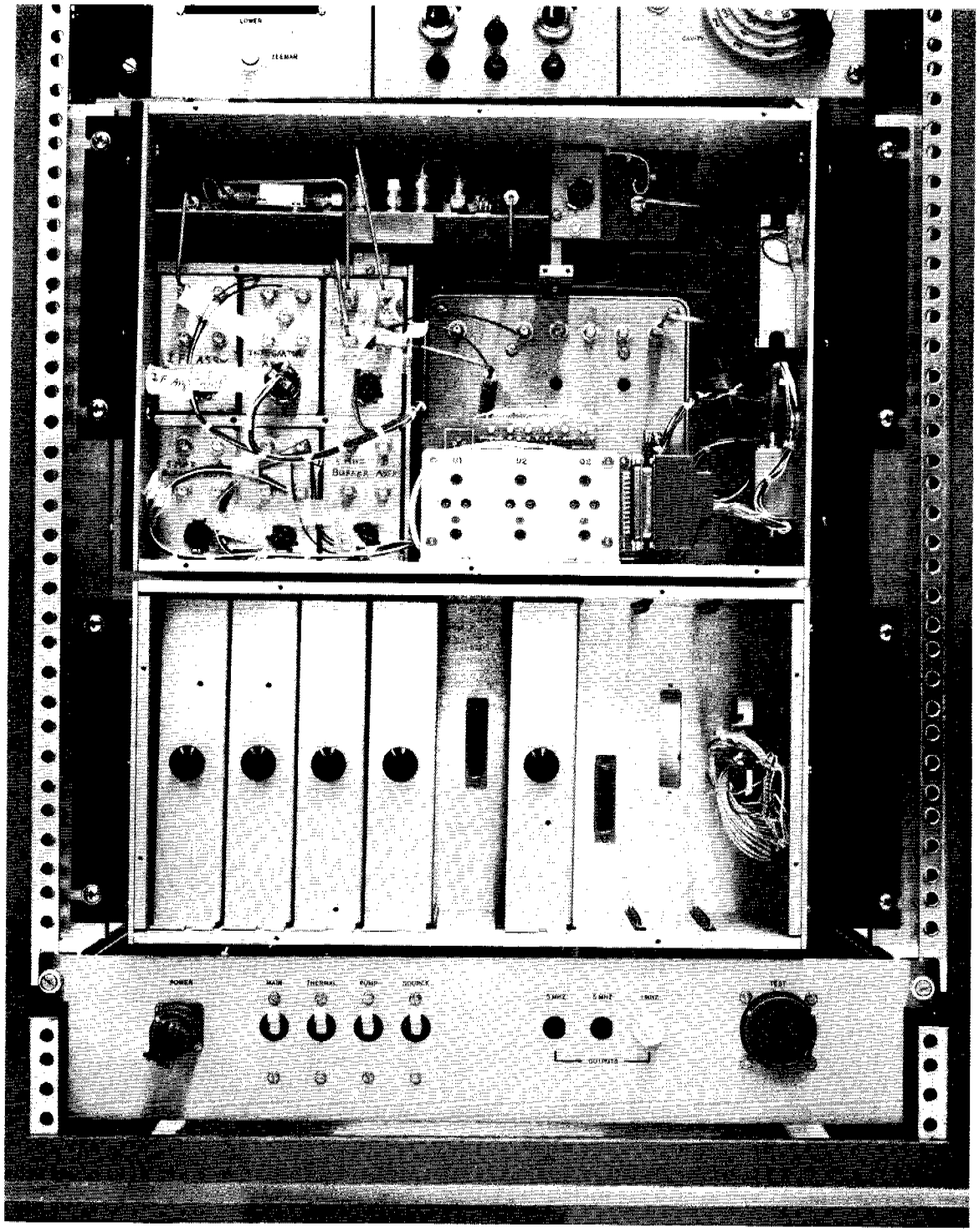

Fig. 10 VLG-11 receiver and synthesizer.

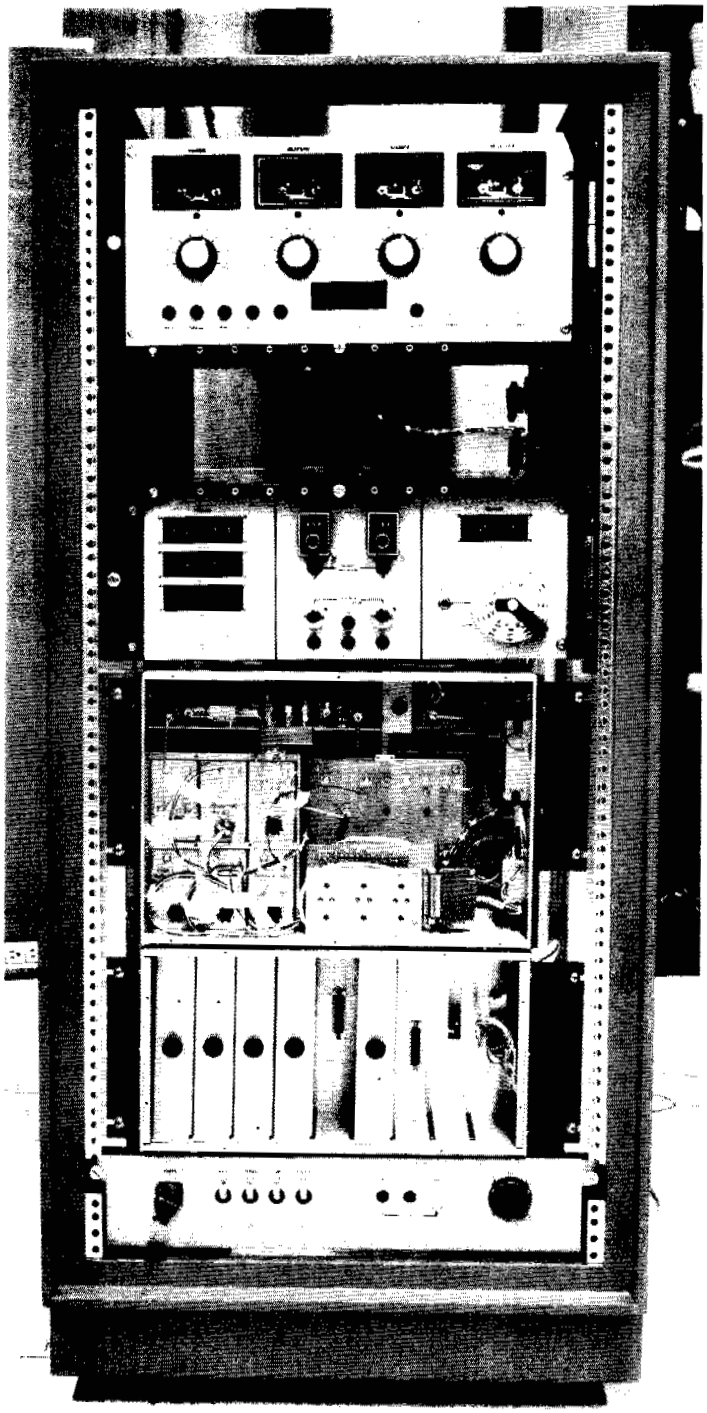

Fig. 11 VLG-11 maser front view.

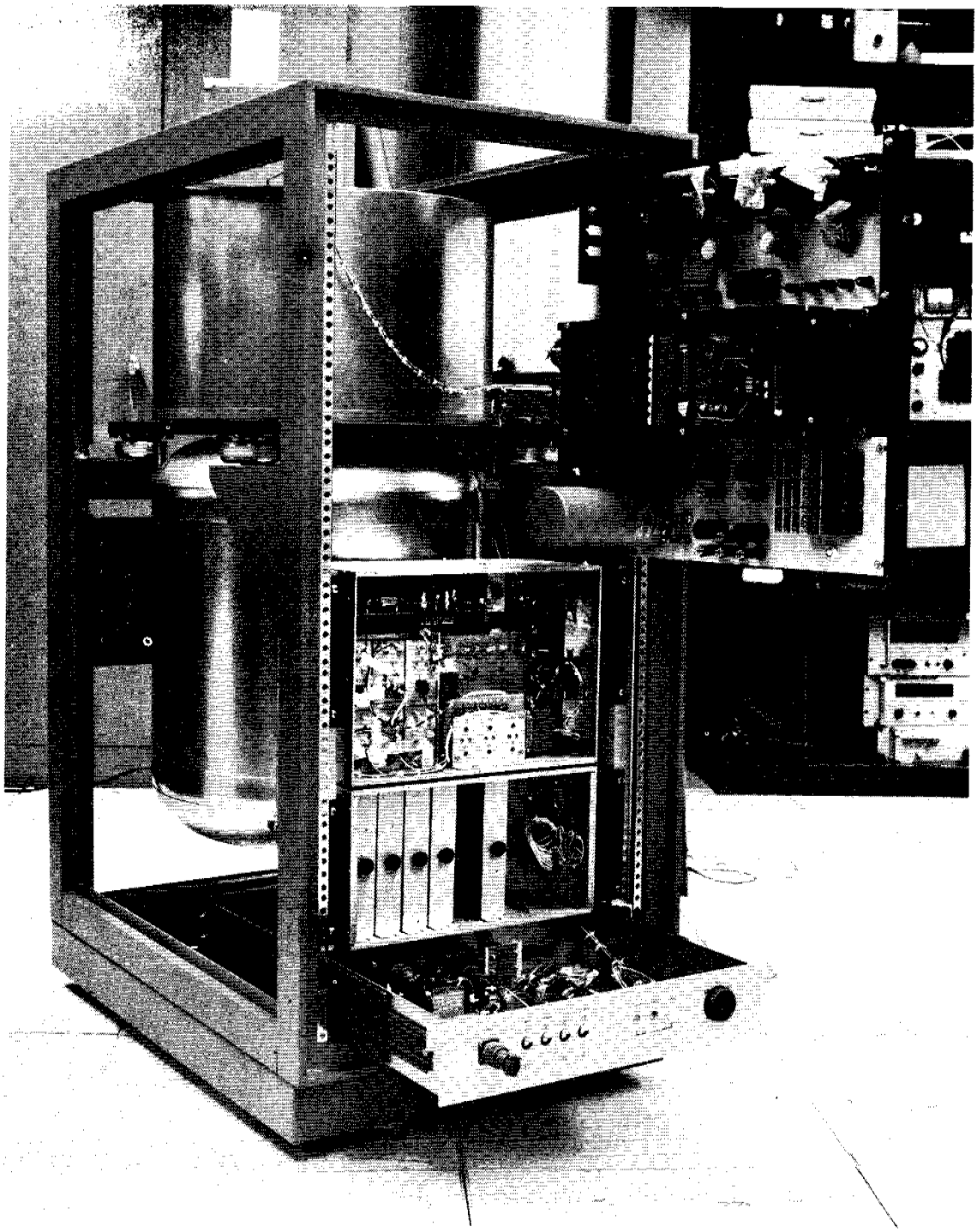

Fig. 12 VLG-11 maser front view showing electronics assemblies opened for inspection.

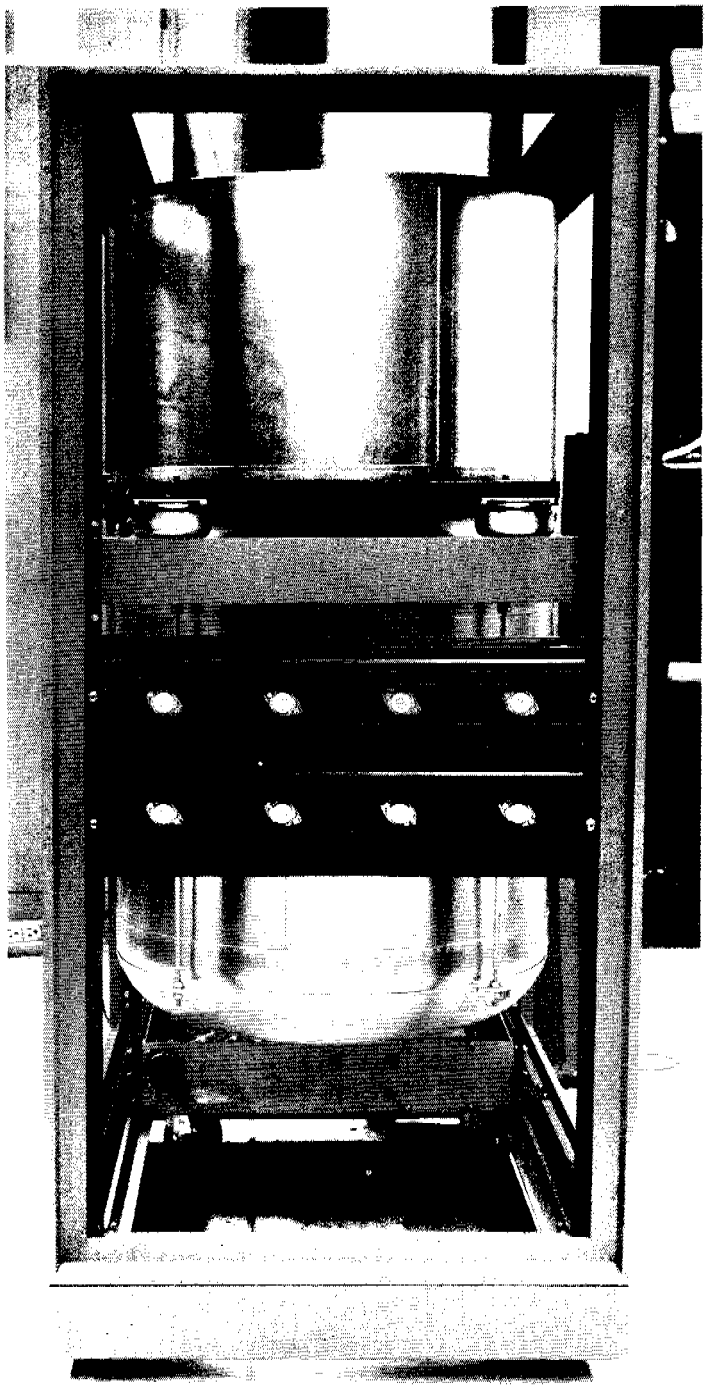

Fig. 13 Rear view of VLG-11 maser showing power-amplifier assembly and heat sink.

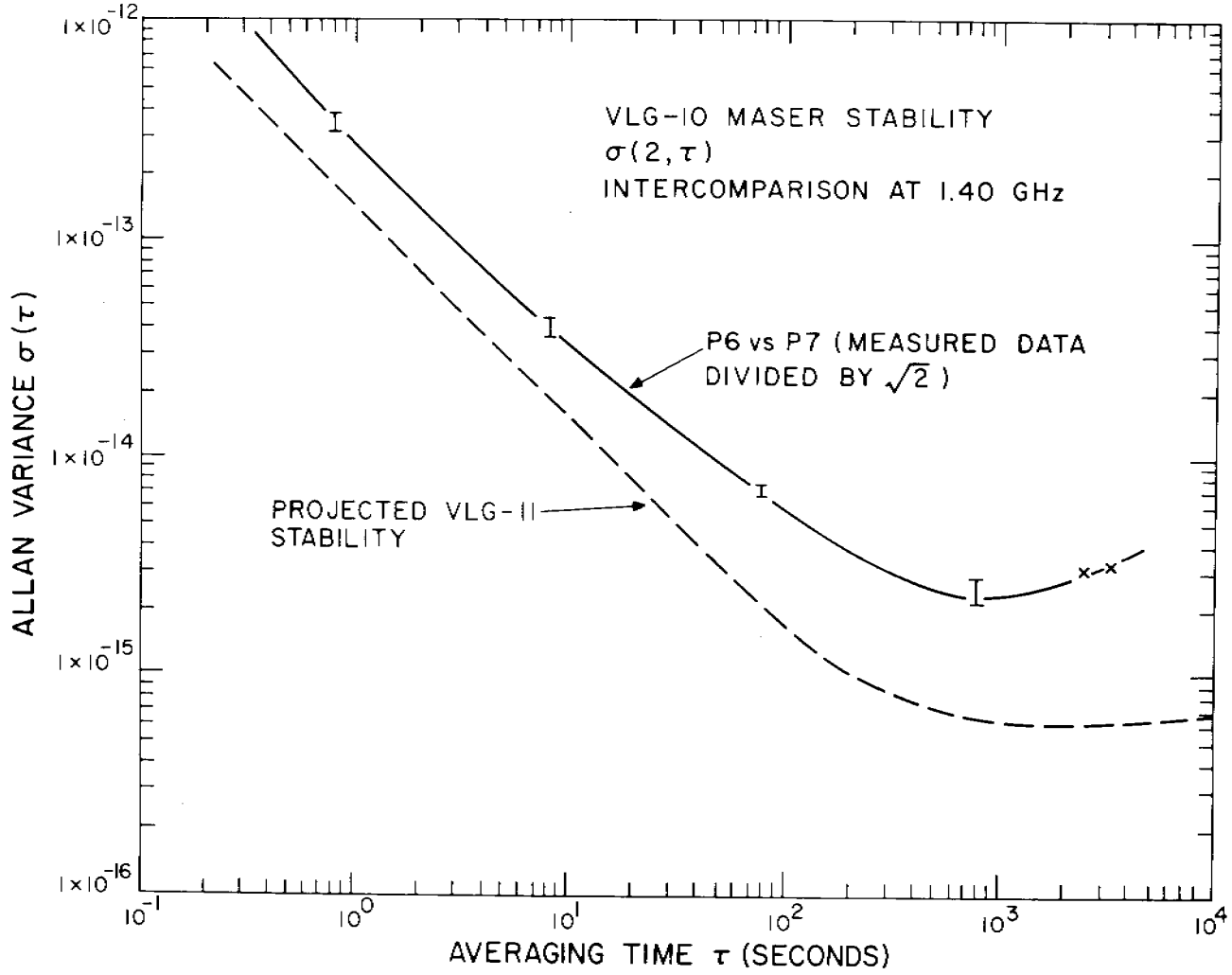

Fig. 14 VLG-10 maser stability data and projected VLG-11 performance. Error bars show the spread between a number of individual data sets. Crosses are for a single data set.