NEW TE_{111}-MODE HYDROGEN MASER

Edward M. Mattison, Martin W. Levine, and Robert F. C. Vessot,
Smithsonian Astrophysical Observatory

ABSTRACT

We describe the construction and discuss the properties of a TE_{111}-mode hydrogen maser resonant cavity that has achieved maser oscillation. The TE_{111}-mode cavity is about half the size of traditional maser cavities and combines the electromagnetic resonator and the hydrogen storage region in a single structure. The measured line Q of the operational cavity is $Q_\ell = 8.5 \times 10^8$, and the probability for hydrogen-atom relaxation on the Teflon-coated walls is approximately 5×10^{-5}/impact. We also discuss a possible modification to the cavity that would increase the magnetic filling factor.

INTRODUCTION

The minimum size of a hydrogen maser is determined by the size of its electromagnetic resonant cavity, which must have a resonance frequency of 1420 MHz. Typical TE_{011}-mode resonators traditionally used in masers are approximately 28 cm long and 28 cm in diameter. The cavity, in turn, is surrounded by a vacuum envelope, temperature-controlling ovens, thermal insulation, and several layers of magnetic shields. A lower size limit for TE_{011}-mode hydrogen masers appears to be represented by the maser that flew in the probe rocket of the recent gravitational redshift experiment[1]; this maser was 0.6 cm long and 0.5 m in diameter and weighed 40 kg.

We have investigated the possibility of using different types of cavities to reduce the size of hydrogen masers.[2] In particular, we have shown that a new type of cavity, the cylindrical TE_{111}-mode resonator, is capable of sustaining maser oscillation, and we have constructed and successfully operated such a cavity in a maser.

The TE_{111}-mode cavity, which is compared with the TE_{011}-mode cavity in Figure 1, is roughly half the length and diameter of the TE_{011} resonator. It is divided into two equal storage volumes by a Teflon-coated septum, with half the hydrogen beam entering each volume. A separate storage bulb is not used; rather, the inside walls of the resonator are coated with Teflon and, together with the Teflon septum, constitute the hydrogen-confining surface. Thus, the resonator and "bulb" are a single structure.

OSCILLATION CRITERION

In a hydrogen maser, hydrogen atoms are confined to a region of constant-phase RF magnetic field within an electromagnetic resonant cavity. To produce self-oscillation, the field amplitude must be great enough to stimulate emission from the atoms at a rate that overcomes the electrical losses in the cavity. The necessary condition for oscillation thus involves both the resonator Q and the geometrical distribution of RF fields within the hydrogen storage volume. The oscillation criterion is given by[2]

$$S \equiv Q_L \eta' \geq 5.9 \times 10^3 \quad , \tag{1}$$

where the parameter S is the product of Q_L, the loaded cavity Q, and η', the storage-bulb filling factor. The filling factor is defined by

$$\eta' = \frac{V_b}{V_c} \frac{\langle H_z \rangle_b^2}{\langle H^2 \rangle_c} \qquad \text{for the } TE_{011}\text{-mode cavity} \tag{2a}$$

$$\eta' = \frac{2V_b}{V_c} \frac{\langle H_z \rangle_b^2}{\langle H^2 \rangle_c} \qquad \text{for the } TE_{111}\text{-mode cavity} \tag{2b}$$

where V_b = volume of a single storage region,

V_c = total cavity volume,

$\langle\rangle_b$ = average over storage region,

$\langle\rangle_c$ = average over cavity, and

H and H_z = RF magnetic field.

The value of Q_L depends on the materials and construction of the cavity, as well as on its size, shape, and electromagnetic mode; η', on the other hand, is a function only of the storage-bulb and cavity geometries.

Figure 2 shows S_0, the value of S for an uncoupled resonator, as a function of shape for a silver-coated TE_{111}-mode maser cavity. Such a cavity with a length-to-diameter ratio L/D = 1.25 has a calculated filling factor of $\eta' = 0.42$. With a loaded Q of 24000, attainable in practice, this gives S = 10000, almost twice the threshold value, indicating that the cavity should support oscillation.

PROPERTIES OF THE TE_{111}-MODE MASER

A prototype TE_{111}-mode cavity, 18 cm long and 16 cm in diameter, is shown in Figure 3. For convenience of construction it was made of OFHC copper, rather than of low-expansion ceramic, and is divided into

four sections. The division parallel to the longitudinal cylinder axis allows the left and right halves to clamp a thin Teflon sheet that separates the two atom-confining regions, while the division perpendicular to the axis permits the cavity's resonance frequency to be set by machining the cavity to the proper length. These dividing planes were chosen to coincide with zero-current lines of the TE_{111} mode so that good electrical contact between the sections is not a critical requirement.

The cavity was mounted on a modified maser that contains a hydrogen source, magnetic shields and solenoids, and thermal controls. The resonance frequency was adjusted during operation by varying the cavity's temperature and by moving a copper rod within a small Teflon-coated glass dome that extends into the cavity. A similar dome houses the RF pickup loop.

The characteristics of the TE_{111} resonator are given in Table 1. The unloaded cavity Q is quite close to its theoretically calculated value, the high value probably being due to the use of a solid copper cavity with 1 cm walls and proper dividing planes, which combine to prevent RF leakage. The measured Q_L, together with the calculated η', gives a value for the oscillation parameter S that is 1.9 times its threshold value, as predicted. The oscillating TE_{111}-mode maser has an RF power output of

$$P_{out} \simeq -102 \text{ dBm} = 6.3 \times 10^{-11} \text{ mw}$$

and a measured line Q of

$$Q_\ell = 8.5 \times 10^8$$

Table 1. TE_{111} cavity parameters.

Measured		
Loaded Q:	$Q_L = 27 \times 10^3$	
Coupling parameter:	$\beta = 0.12$	
Unloaded Q:	$Q_0 = 30 \times 10^3$	
Calculated		
Unloaded Q:	$Q_0 = 33 \times 10^3$,	$\frac{Q_0(\text{meas})}{Q_0(\text{theo})} = 0.9$
Filling factor:	$\eta' = 0.419$	
Oscillation Criterion		
$S = Q_L(\text{meas}) \times \eta'(\text{calc}) = 11.3 \times 10^3$		
$\frac{S}{S_{\text{thresh}}} = 1.9$		

The hydrogen-atom relaxation time was measured to be 0.34 sec, while the calculated geometrical lifetime is 1 sec, giving a wall-collision relaxation rate of 2 sec^{-1}. This corresponds to a relaxation probability of approximately 5×10^{-5}/impact, which agrees with other relaxation measurements on FEP Teflon.[3]

MODIFIED CAVITY DESIGN

In the TE_{111} resonator discussed above, the hydrogen atoms sample the RF magnetic field throughout the cavity, including near the ends, where the field is transverse rather than longitudinal. If the atoms were restricted to the center region of the cavity, the filling factor of the resonator could be increased and frequency instabilities caused by changes in the transverse RF and DC magnetic-field gradients[4] could be reduced.

One method of confining the hydrogen atoms to the center is to fill the ends of the cavity with a solid dielectric material such as quartz.[5] A second method is to form the ends of the hydrogen storage volume with transverse septa of thin, Teflon-coated quartz, as shown schematically in Figure 4. Shortening the storage region by the latter technique increases the filling factor by approximately 15% for a storage region that is three-fourths the length of the cavity (Figure 5). Both methods of shortening the storage region have the disadvantage that the dielectric would decrease the cavity's Q and increase its sensitivity to temperature change (although the use of very thin quartz septa could minimize these effects), and thus neither method is likely to be practical if employed solely to increase the filling factor. However, the second method may be useful for investigating, and possibly reducing, the inhomogeneity frequency shifts.

ACKNOWLEDGMENT

This work was supported in part by Contract N00014-71-A-0110-0003 from the Department of the Navy, Office of Naval Research, administered by the U.S. Naval Research Laboratory.

REFERENCES

1. R. F. C. Vessot, M. W. Levine, E. M. Mattison, T. E. Hoffman, E. A. Imbier, M. Tetu, G. Nystrom, J. J. Kelt, Jr., H. F. Trucks, and J. L. Vaniman, Space-borne hydrogen maser design. In Proceedings of the Eighth Annual Precise Time and Time Interval Applications and Planning Meeting, U.S. Naval Research Laboratory (this volume).
2. E. M. Mattison, R. F. C. Vessot, and M. W. Levine, A study of hydrogen maser resonators and storage bulbs for use in ground and satellite masers. In Proceedings of the Seventh Annual Precise Time and Time Interval Applications and Planning Meeting, Goddard Space Flight Center, Greenbelt, Maryland, pp. 243-263, 1976.

3. M. Desaintfuscien. Ph.D. Thesis, University of Paris, Orsay, 1975.
4. S. B. Crampton, Effects of atomic resonance broadening mechanisms on atomic hydrogen maser long term stability. In Proceedings of the 2nd Frequency Standards and Metrology Symposium, National Bureau of Standards, Boulder, Colorado, pp. 589-613, 1976.
5. V. J. Folen. Naval Research Laboratory Report, to be published.

FIGURE CAPTIONS

Fig. 1 — TE_{011} and TE_{111} maser cavities. Section views are drawn to the same scale; the actual inside dimensions of typical cavities are TE_{011}, 25-cm length x 29-cm diameter; TE_{111}, 19-cm length x 15-cm diameter.

Fig. 2 — Oscillation parameter S_0 for uncoupled TE_{111}-mode maser cavity as a function of cavity shape.

Fig. 3 — Photograph of experimental TE_{111}-mode cavity on test-bed maser.

Fig. 4 — Section view of TE_{111}-mode maser cavity with shortened hydrogen storage volume.

Fig. 5 — Filling factor of TE_{111}-mode cavity with shortened storage volume.

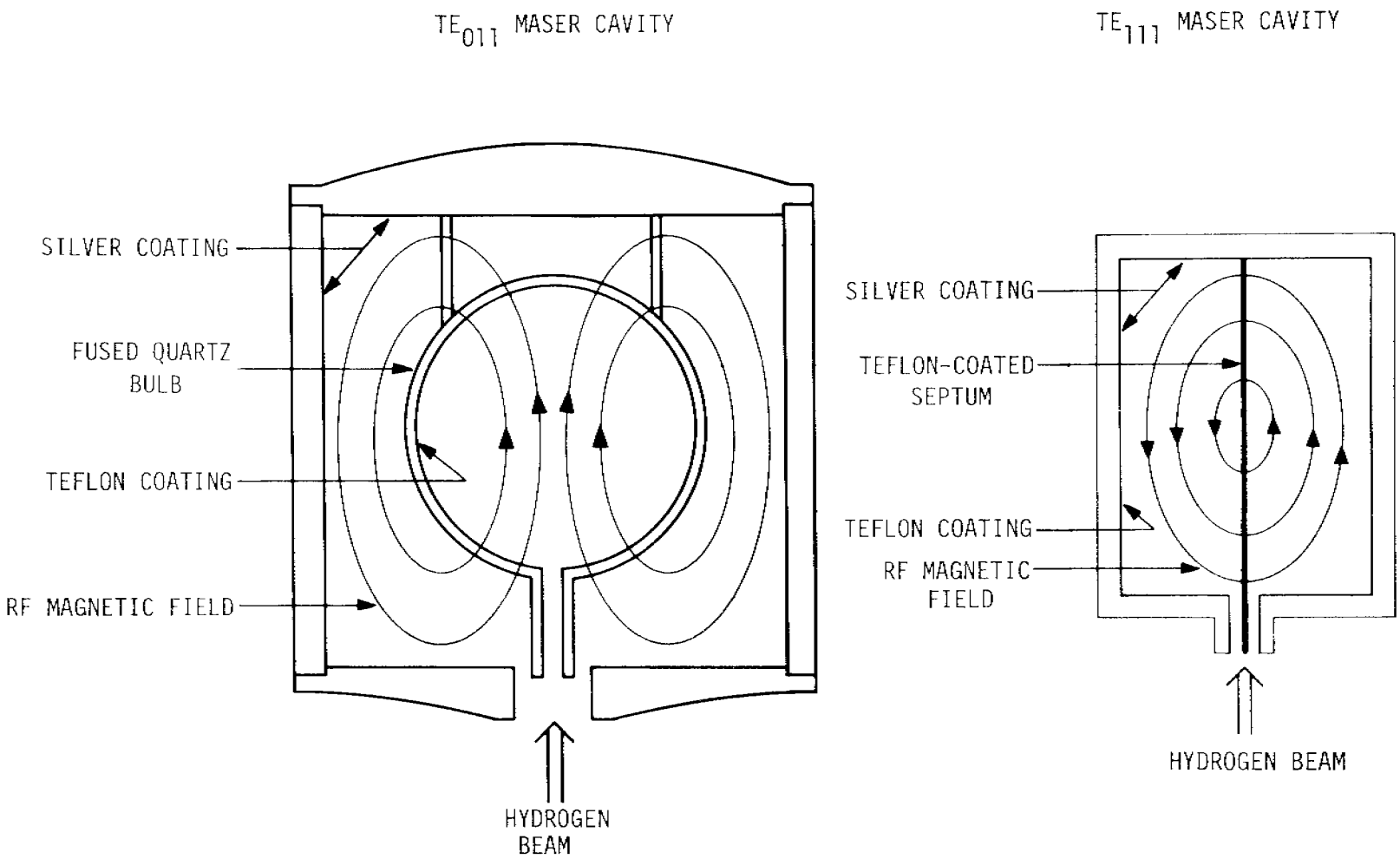

Fig. 1-TE_{011} and TE_{111} maser cavities. Section views are drawn to the same scale; the actual inside dimensions of typical cavities are TE_{011}, 25-cm length x 29-cm diameter; TE_{111}, 19-cm length x 15-cm diameter.

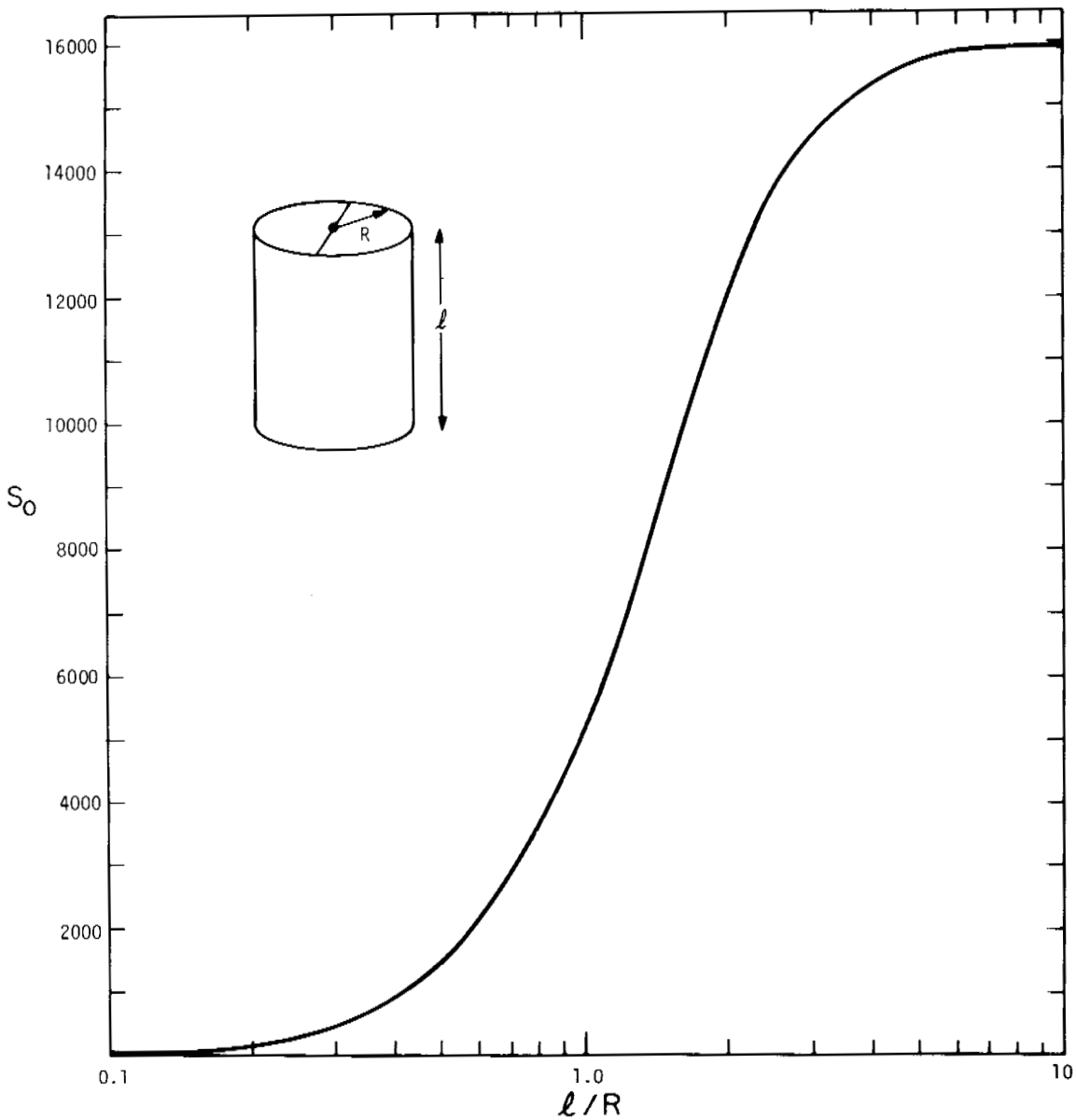

Fig. 2-Oscillation parameter S_0 for uncoupled TE_{111}-mode maser cavity as a function of cavity shape.

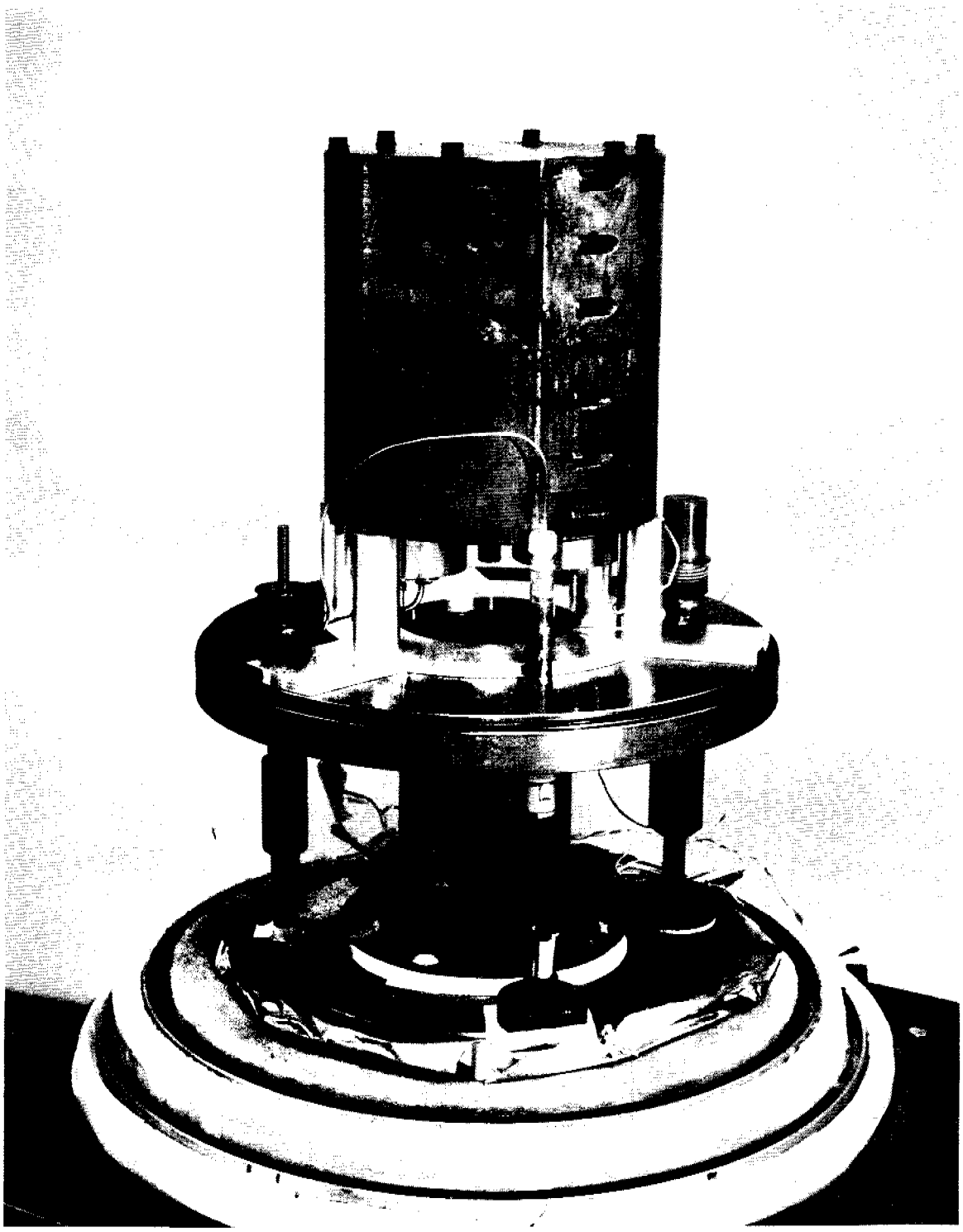

Fig. 3-Photograph of experimental TE_{111}-mode cavity on test-bed maser.

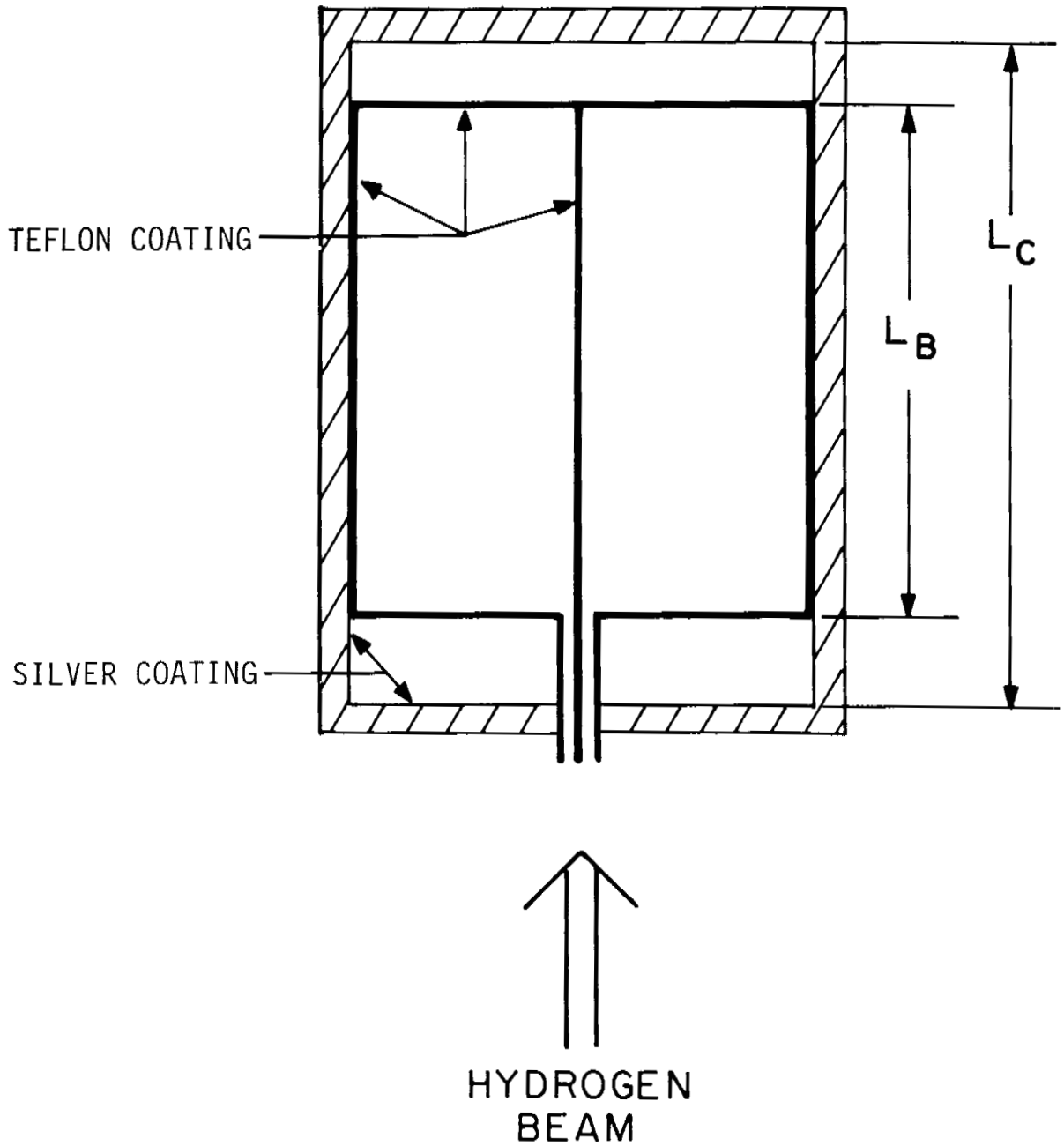

Fig. 4-Section view of TE_{111}-mode maser cavity with shortened hydrogen storage volume.

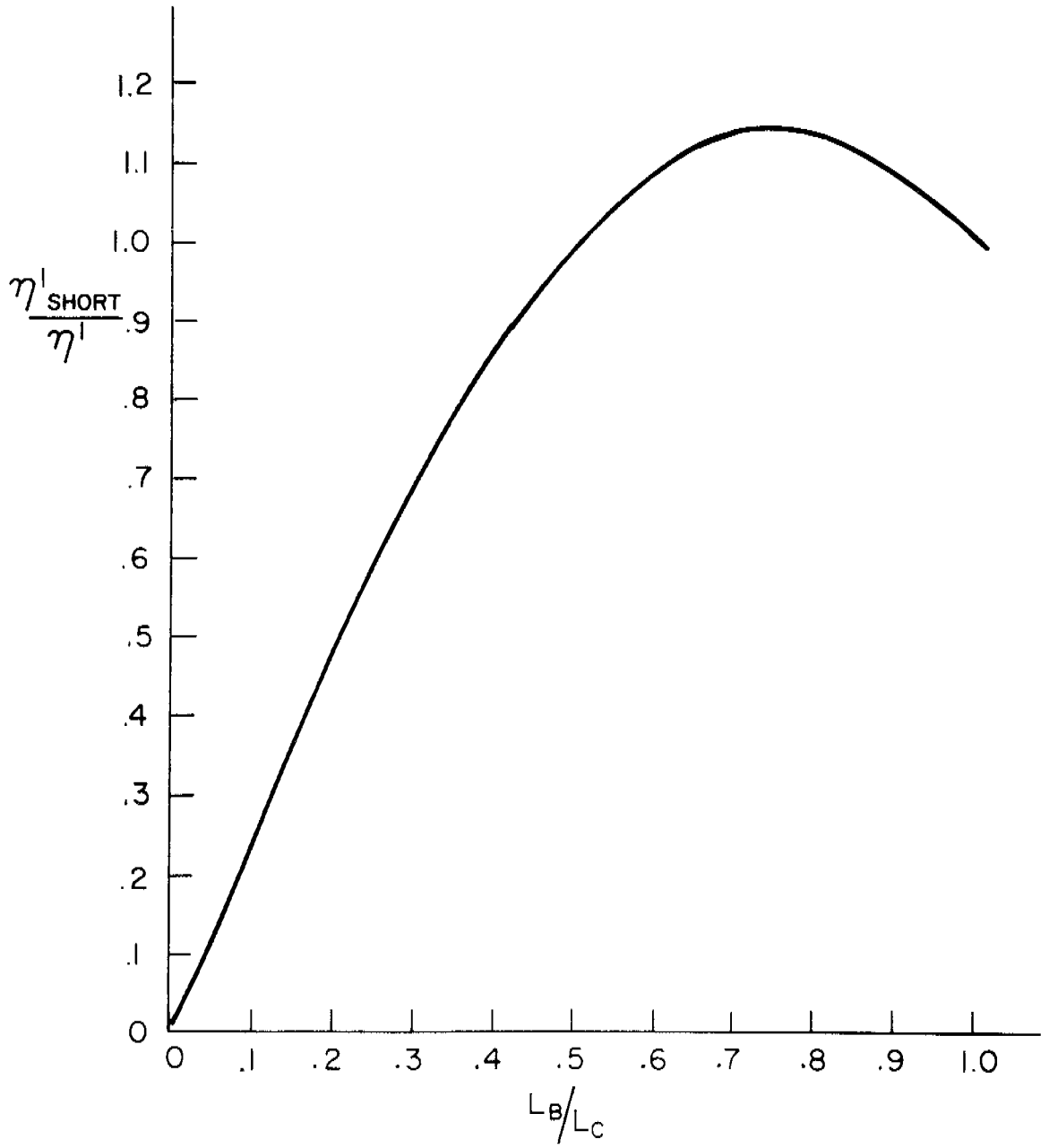

Fig. 5-Filling factor of TE_{111}-mode cavity with shortened storage volume.