SPECIAL PURPOSE ATOMIC (MOLECULAR) STANDARD*

David J. Wineland, David A. Howe, and Helmut Hellwig

Frequency & Time Standards Section
National Bureau of Standards
Boulder, Colorado 80302

ABSTRACT

A special purpose frequency standard and clock is being developed featuring a novel combination of stability and accuracy performance, shock and temperature insensitivity, instant turn on characteristics and featuring low weight, power consumption, and potentially low fabrication costs.

This new device is based on the well-known 3-3 transition in ammonia (~ 23 GHz) which provides the frequency reference for a ~ 0.5 GHz oscillator. The oscillator signal is multiplied in one step to K-band and injected into a waveguide cell containing ammonia. The absorption feature is used to frequency lock the 0.5 GHz oscillator to line center. A fixed output frequency between 5 and 10 MHz is provided by direct division from 0.5 GHz. The 0.5 GHz oscillator is a novel strip-line transistor oscillator of high spectral purity. It may not only be important for our standard but also for other atomic standards where acceleration and irradiation problems are encountered. The absorption device may well be able to fill a metrology need not satisfied by presently available atomic and quartz crystal standards.

Design goals of the present project are 10^{-10} stability from ~ 10 sec. to 10^4 sec, and 10^{-9} absolute accuracy. The rather broad linewidth of ammonia (~ 100 kHz) reduces overall resolution but allows a short (< 1 ms) servo attack time thus reducing the acceleration sensitivity of the primary 0.5 GHz oscillator. Working at low pressure ($< 10^{-4}$ Torr $\simeq 1.33 \times 10^{-2}$ Newton/m^2) reduces temperature sensitivity to an acceptable level. Power consumption should be < 3 W and expected size of a working device $\sim 10^3$ cm^3.

---

* This research was supported by the Advanced Research Projects Agency of the Department of Defense and was monitored by ARPA under Contract #3140.

INTRODUCTION

The Special Purpose Atomic Standard Project has developed from a need for a frequency standard satisfying specific requirements not found in other precision oscillators. Briefly, currently available precision oscillators can be divided into two classes: the quartz crystal oscillators and atomic "clock" oscillators. The quartz crystal oscillators, while having good short-term stability and low cost ($0.5K to $2000 for high-quality units) suffer three major drawbacks: (1) The frequency is not fundamental and is related only to the macroscopic dimensions of the quartz crystal. Therefore, calibration is required initially and subsequent recalibration is required due to "aging" of the crystal. Aging rates of 1 part in 10^8 (fractional frequency change) per year are considered good. (2) The crystal oscillator is sensitive to vibration and shock. These environmental factors affect the macroscopic dimensions of the crystal and therefore can cause step shifts in frequency. (3) The quartz crystal oscillator is temperature sensitive and requires significant warm-up time to achieve a stable output frequency.

Atomic oscillators provide stabilities from one part in 10^{10} to one part in 10^{13} per year. Their cost ranges from $3,000 to above $20,000 depending upon performance. Their high frequency stability and accuracy make recalibration unnecessary for most applications. However, the use of presently available atomic oscillators in place of crystal oscillators for the purpose of avoiding recalibration routines or reducing environmental sensitivity is technical "overkill," since the excellent performance of today's atomic oscillators (obtained at high cost) is not required for many applications. In addition, their warm-up time is slow; and their performance under severe environmental conditions (acceleration, vibration, temperature, barometric pressure and magnetic fields) is inadequate for some applications.

Therefore, a special purpose oscillator or clock with frequency accuracy in the 10^{-9} range and frequency stability in the 10^{-10} to 10^{-11} range would satisfy the needs of many technical applications if low cost and insensitivity to environment could be obtained. Fig. 1 (solid line) shows the frequency stability desired in the present work.

In order to meet the above requirements we might hope to look for a system which incorporates the desirable features of both the atomic oscillators (high accuracy, stability) and crystal oscillators (low cost) and includes features of environmental insensitivity and possible fast warm-up. Since we do not require ultimate accuracy and stability, we might make sacrifices in this regard. We have chosen as the frequency reference the (3-3) transition in ammonia $N^{15}H_3$ gas ($\sim$ 23 GHz) which is contained in a simple closed cell. Historically, this same scheme was used in the first "atomic" clock in 1948 [2]. Research on this basic device was pursued until about 1955 but was discontinued

then because new methods, although more complicated, promised better accuracies and stabilities than a gas cell absorption device. In 1955, the accuracy of an ammonia device was about 5 parts in 10^8 with approximately 1 part in 10^8 stability, and the apparatus was quite complicated and expensive, suitable only as a laboratory instrument [3]. However, since that time, vast improvements have been made in RF and microwave electronics; these coupled with new insights into the electronic and physical problems encountered suggest that the ammonia absorption cell idea could be used to provide the "special purpose" oscillator described above.

The basic scheme used for the standard is shown in Fig. 2. For simplicity and economy, the primary oscillator in the system is at ~.5 GHz. With this, one can multiply in one step to ~23 GHz with ample output power to detect the ammonia transition. In addition, one can directly divide the .5 GHz signal to produce a fixed output frequency between 5 and 10 MHz, which is harmonically related to the ammonia transition frequency.

APPROACH

It might be possible to use an existing atomic oscillator (rubidium, hydrogen, cesium) to accomplish the goals of the special purpose frequency standard. However, the increased complexity and sophistication of these devices which results in their superior performance are just the factors which increase their cost and decrease their reliability in an adverse environment. This sophistication is introduced primarily to make the reference transition free from first-order Doppler broadening. This results in increased line-Q and therefore increased accuracy and stability. In the approach chosen here we contain the reference "atom," the ammonia molecule, in a closed waveguide cell. The linewidth is limited by Doppler broadening to give a fundamental upper limit on line $Q \simeq 3 \times 10^5$. This can be compared to the line Q's of the high performance atomic oscillators [4]:

$$Q(Rb) \simeq 3 \times 10^7 \qquad Q(H) \simeq 10^9 \qquad Q(Cs) \simeq 3 \times 10^7.$$

Therefore, sacrificing resolution, we obtained a much simpler system resulting in a significantly reduced cost and increased reliability. Also, the lower line Q allows fast servo loops within the standard, thus reducing acceleration sensitivity.

(a) Microwave Source

In specifying a possible fundamental oscillator for the standard, one has reasons for not using a microwave oscillator. They are: (1) Fundamental oscillators at K-band draw too much power, are too expensive, and are not stable enough (by a factor of at least 10) in short term to be useful as a primary oscillator. (2) In order to compare an output frequency of between 5 and 10 MHz to the ammonia transition

frequency we require a multiplier chain. (Note that few dividers exceed 1 GHz input frequency; therefore, we could not divide directly from ~23 GHz.) The development of a special ~.5 GHz oscillator is more practical as shown in the diagrams of Figs. 2 and 3.

(b) Gas Cell

The advantages of using the ammonia gas cell as a reference are:

(1) The microwave transition of interest provides an absorption signal which is orders of magnitude stronger than those of other interesting molecules or atoms [5]. This is a significant advantage because it means that the desired signal-to-noise is obtained without resorting to impractically large microwave cell sizes as would be necessary for amost any other gas.

(2) Since ammonia remains in the gas phase for the temperature range of interest (-40° to $+60^{\circ}$C) the device has instant turn-on capability. One must, however, note the existence of a pressure (therefore temperature) dependent frequency shift; this is discussed more fully below.

(3) The frequency of the ammonia transition is fundamental in nature and therefore essentially eliminates the need for calibration of the device.

(4) The ammonia transition linewidth is fairly broad (~100 kHz). This is a disadvantage in terms of the ultimate accuracy obtainable, but it allows the primary oscillator to be locked to the ammonia reference in very short times (< 1 ms). The advantage is that the vibration sensitivity of the primary ~.5 GHz oscillator is reduced by as much as the open loop gain of the servo system at the vibration frequency of interest. Such a technique is not feasible with other currently available high precision oscillators because of the inherent narrow linewidths.

RESULTS

(a) Introduction

For ease of discussion and clarity, it is convenient to divide the system into four components:

(1) ~.5 GHz primary oscillator and divider.

(2) ~.5 GHz to 23 GHz multiplier,

(3) ammonia gas cell,

(4) servo electronics and integrated system.

(b) .5 GHz primary oscillator and divider

In reviewing the possible oscillator designs, it appeared that an oscillator using a simple LC resonator should be investigated. Advantages to this design include:

(1) wide tunability,

(2) continuous operation under very adverse conditions (shock, vibration),

(3) good short-term stability,

(4) low cost.

An oscillator was developed operating at about 0.5 GHz and having a free-running stability as shown in Fig. 1. The curves include a divider chain (÷ 100) after the .5 GHz oscillator. These data were computed using the two-sample variance for different averaging times [1]. The bandwidth of the measurement system affects the variance in the case of white and flicker of phase type noise; therefore, two curves are plotted around the averaging times of interest (~10 ms). The oscillator features a P.C. board etched strip as a transmission line resonator (stripline resonator). In the design of a high-performance stripline oscillator, we must address three principal problems [6]:

(1) minimization of resonator losses,

(2) minimization of additive transistor noise, and

(3) shock and vibration isolation of the resonator.

There are other problems which must be looked at, but these three represent the major contributors to degradation in stability.

Radiative loss is minimized by adopting a three-layer sandwich etch technique. In this design, two ground planes are used on the top and bottom surfaces of the P.C. board with the stripline centered in the dielectric. Fig. 4 shows a cross-section of the line. Fiberglass-teflon is used for the dielectric which has a small loss tangent of about 10^{-3}, thus keeping loss at a minimum. Thestripline itself is a 7 cm length of copper which is 1 cm wide and 2 mm thick. Contact resistance is minimized by using silver-solder on all connections. The unloaded Q of the line resonator at .5 GHz is about 400. Loaded Q of the resonator is maximized by the use of a field-effect transistor as the active element [7]. It is chosen to have a high forward transconductance and a high cut-off frequency.

Additive transistor noise is due primarily to low frequency (near carrier) flicker noise behavior and high frequency (far from carrier)

white phase noise. Flicker behavior is difficult to characterize in many instances. Helpful in the reduction of flicker noise is a transistor which is manufactured with care and in a clean environment, since flicker noise may relate to sporadic conductance through the device due to impurities. White phase noise is usually associated with thermal noise due to operation of the device at room temperatures. One can then resort to devices capable of higher current densities in order to increase signal-to-noise. A tradeoff exists between white phase and flicker noise, however, since higher device currents usually aggravate the flicker noise problem. Usually, we arrive at a compromise solution which depends directly on the application of the oscillator. The curves shown in Fig. 1 represent a much higher device drive level than is common in, say, quartz crystal oscillators.

At frequencies around .5 GHz, transistor package parameters (inductance and capacitance) and stray parasitic elements such as connecting lead inductance and stray capacitance all contribute to the fundamental resonance. If one is to achieve a relative frequency stability approaching 1×10^{-9}, then it is imperative to maintain resonator inductance and capicatance values stable to this level. The greatest deterrent to maintaining high inductive and capacitive stability is vibration sensitivity of the oscillator. This problem of microphonics has been reduced by using the three-layer P.C board and rigidly mounting all components and leads with a low-loss doping compound. The oscillator is in turn rigidly fixed to an aluminum block which acts as the shield for the components. The test block weighs about 3 kg. Depending on the application, one can rigidly mount or soft mount the oscillator into a system. If rigidly mounted, structure-born vibration is directly applied to the oscillator. A soft mount designed to isolate the oscillator from vibration can reduce the transmitted vibration at higher frequencies at the cost of increasing the vibration sensitivity at a lower frequency. Damping material can also be used to alter the vibration response.

In the ammonia standard, the problem of vibration sensitivity of the fundamental oscillator is only significant in extreme cases of shock and vibration where the dynamic range of the servo system is exceeded or the period of the vibration is shorter than the servo attack time. The servo attack time can be smaller than .1 ms, since the NH_3 resonance is wider than 10 kHz. Thus, the design of the oscillator mount should yield a vibration response in which frequencies of 10 kHz and above are suitably attenuated.

(c) Step recovery diode multiplier

It is desirable to make a multiplier module with fairly low output Q ($Q \simeq 10$) and output power $\sim$ 100 μW. We have used state-of-the-art step-recovery diodes in a waveguide multiplier module. In simplest terms, the problem is one of impedance matching for both the input and output frequencies. For example, for the input circuit ($\sim$ .5 GHz) the

dynamic diode impedance is $Z \simeq 1\Omega$. Therefore, two π section transformers were cascaded to match to the 50Ω output impedance of the .5 GHz amplifier. Approximately 0.5 to 0.75 W input power is needed to "snap" the diode properly. To accomplish this, a microstrip hybrid class "C" amplifier was used. The amplifier, microstrip matching circuit and multiplier module were integrated into one package in order to avoid instabilities due to connections. The output circuit is composed of a shorting stub and iris coupling to form a cavity $Q \simeq 10$ with the diode matched to the characteristic impedance of the narrow height waveguide. In the interest of rigidity and simplicity, shims were used rather than movable plungers. With ~0.6 W input power to the diode, output power as shown in Fig. 5 was obtained. This power is more than 5 times what is needed in the system.

(d) Ammonia gas cell

The ammonia gas cell is straightforward in principle but must be refined to compensate for those effects which influence frequency stability and accuracy. For initial experiments, relatively short cells (50 cm - 100 cm long) were constructed of K or X band waveguide. In order to study pressure related effects (i.e., broadening and shifts), a flow system was constructed as shown in Fig. 6. The waveguide cells are sealed using mica windows and indium seals.

(e) Pressure problems

It should be noted that standard X or K band cells with copper surfaces are not suitable for final permanently sealed cells. This is because ammonia sticks to most surfaces (including copper). This accentuates the pressure shift because the gas density also increases with temperature. If there were no pressure shift, we would like to operate at a pressure as high as possible but not have the line be broadened by pressure. This occurs for $p \simeq .4$ N/m^2 (1 Torr $\simeq$ 133 N/m^2). We have measured the shift, and it has been previously reported [9] that the fractional frequency shift due to pressure is:

$$\frac{\Delta f_0}{f_0} \sim 1.5 \times 10^{-7} p$$

where p is in N/m^2. Therefore, if we operated at a pressure of .7 N/m^2 we incur an absolute frequency shift of 10^{-7}. In order to obtain 10^{-9} accuracy, we would need to know the pressure to 1 percent. For the long-term stability goal of 10^{-10}, we would have to hold the temperature of the gas to 0.3°C (assuming no sticking of ammonia to the walls).

Three approaches exist to overcome these basic pressure effects:

(1) We must first ensure that sticking on the walls is kept to a minimum. To minimize this effect, a suitable "non-sticky" surface will be sought; for example, tests have begun using teflon- and paraffin-coated cell walls.

(2) The temperature effect can also be reduced by operating at a lower pressure. This degrades signal-to-noise but can be compensated by increasing cell size. If we operate at a pressure of 1.3×10^{-2} Newton/m^2 ($\sim 10^{-4}$ Torr) and if ammonia "sticking" can be kept to a minimum, we would expect a basic temperature sensitivity of $6 \times 10^{-11}/^{o}C$. This is to be compared to the basic (uncompensated) temperature sensitivity of the rubidium atomic clock, which is about $1 \times 10^{-10}/^{o}C$.

(3) Compensation schemes can be used whereby the pressure is sensed and compensation is made in the output frequency.

Since the projected cell size may be as large as 1000 cm^3, we must employ schemes to make it convenient in a compact package. A straightforward way to make the cell larger is to make it longer. We can then form it into a spiral. Our preliminary experiments use glass tubes which are metal plated on the outside (forming circular cross-section waveguide) and are formed into spirals (~25 cm diameter) and mated to standard waveguide flanges.

Servo electronics and integrated system

Although the performance of the device is not high when compared to a state-of-the-art atomic clock, the demands on the servo system in the final system are rather high. This is because we are trying to resolve the rather broad resonance feature (i.e., "split the line") to about 10^{-5} or 0.001 percent. This is within an order of magnitude of the servo requirements on a laboratory cesium standard. This means we must be particularly careful about harmonic distortion in the FM modulation used and about D.C. offsets in the feedback integrators. The most important problems which we face are: (a) frequency pulling due to frequency dependence in the source output power and detected power (source-detector profile), (b) frequency pulling due to the resonant cavity seen by the ammonia (cavity pulling). (c) frequency pulling due to ammonia line distortion, and (d) frequency pulling due to offset voltages and distortions in the servo electronics (servo offsets). In Fig. 2, the basic scheme is illustrated. FM modulation (1-10 kHz) is used on the .5 GHz oscillator; the servo demodulates the detected microwave signal and forces the multiplied oscillator to line center.

(a) Source-detector-profile

The source power output and detector efficiency are, in general, frequency dependent; thus the observed transition rides on top

of a broad profile. Because this background may have a slope and curvature at the transition frequency, it may distort the line slightly and cause a frequency shift. Since this background profile may change in time (due, for example, to temperature change), it affects both long-term stability and accuracy. To solve this problem, we borrow a technique used in stabilized laser work [10]. We can demodulate the third harmonic of the FM rather than the fundamental. By doing this we can null the third derivative of the slope to a high degree rather than first. This is useful because it lowers the profile pulling by approximately the square of the ratio of the background curvature to the curvature of the resonance line. The effects of such a 3rd harmonic lock are shown in Fig. 1, where a definite improvement in stability is observed (until other effects dominate).

(b) Cavity pulling

This is a familiar problem in all atomic clocks to varying degrees and has been documented elsewhere [11]. Very simply, the ammonia and microwave cavity form a system of coupled oscillators. Therefore, varying the frequency of one (say the cavity) changes the observed frequency of the other (ammonia transition). We have

$$\nu \text{ (observed)} - \nu_0 = K \frac{Q_c}{Q_\ell} (\nu_c - \nu_0)$$

where ν_0 = unperturbed ammonia frequency,

Q_c = microwave cavity Q,

Q_ℓ = ammonia transition Q.

ν_c = cavity frequency, and

K = a parameter near 1 which depends on the FM harmonic observed and on the FM amplitude.

Ideally, the pulling effect could be eliminated by using a cell consisting of a piece of waveguide terminated by its characteristic impedance at all frequencies. However, the difficulty in designing such apparatus due to various parasitic effects present under practical conditions precludes the use of such a cell. The importance of this effect can be illustrated by example: if $Q_c \simeq 50$, $Q_\ell \simeq 2 \times 10^5$ we would have to tune the cavity to .02 percent of its linewidth to achieve 10^{-9} accuracy; temperature sensitivity would be $\sim 10^{-8}/^{o}C$ for a copper cavity. Both of these problems are circumvented by servoing the center of the cavity to line center. This can be accomplished, knowing that K in the above expression is different, if we lock to the 3rd harmonic rather than the 5th harmonic (extension of the 3rd harmonic technique).

Therefore, as shown in Fig. 3, we use the 3rd harmonic to lock the oscillator to the apparent line center, then use the 5th harmonic to lock the cavity to the oscillator. This ensures that $(\nu_c - \nu_o) = 0$ in the above expression and therefore eliminates cavity pulling.

(c) Fundamental line distortion

The $N^{14}H_3$ (3-3) transition is slightly asymmetric due to quadrupole hyperfine structure in the molecule [5]. Therefore, the apparent center frequency of the line depends on FM amplitude and microwave power; stability is correspondingly affected as these parameters change. We therefore use the (3-3) transition in $N^{15}H_3$, which is free of these fundamental distortions and for which a well-defined center frequency exists. (Initial tests have also used the $N^{14}H_3$ isotope.)

(d) Servo offsets

At the present time, 2nd harmonic FM distortion, voltage offsets and voltage offset drifts in the servo system along with the pressure shift problem seem to limit long-term stability. For example, an offset voltage can exist on the input of the first integrator in the third harmonic loop (see Fig. 3). With the system locked, a residual 3rd harmonic signal must be present to provide a D.C. level out of the mixer to compensate this offset. To reduce these offset problems, digital demodulators are being investigated.

ENVIRONMENTAL FACTORS

Sensitivity to environmental factors is most easily determined experimentally, and this will be straightforward once some of the obvious problems limiting long-term stability are solved. Nevertheless, theoretical estimates can be made of magnetic field and electric field sensitivity, and other remarks are appropriate for vibration and temperature sensitivity.

Magnetic fields

First-order Zeeman effects cause a splitting of the line on the order of 10 MHz per Tesla. This splitting is symmetric and therefore causes only (usually negligible) broadening except that some asymmetry may be present due to slight differences of the Zeeman effect (uncoupling of the spins) in the two inversion levels. This asymmetry may be of the order of 1 Hz at 10^{-4} Tesla. Measurements need to be made to quantitatively assess this effect. The worst anticipated outcome is the need for one simple magnetic shield for some applications in very high fields. The second-order Zeeman effect is, of course, exceedingly small: the relative shift is about $2 \times 10^{-7} H^2$ (H in Tesla) and thus is negligible).

Electric fields

Electric fields are only of importance in the construction details of the gas cell where thermo-electric and contact potential problems may be present. A worst estimate can be based on the most sensitive hyperfine component of the (3-3) line; for this we have a relative shift of about 10^{-9} E^2 (E in V/cm). Since electric fields surely can be limited to less than 0.1 V/cm, we do not anticipate any problems.

Temperature sensitivity

This has already been discussed above. For best performance it may be necessary to provide some minimal temperature compensation (i.e., a frequency compensation based on the temperature). At least a factor of ten improvement could be expected here; this would then reduce the overall temperature sensitivity by a factor of ten.

Vibration sensitivity

It is difficult to predict a priori what the limits to vibration sensitivity will be, since in many cases they vary with mechanical construction imperfections which are most easily eliminated directly. However, some general comments could be made in this regard. To a high degree the ammonia cell and servo electronics should be vibration insensitive. We can expect then that the vibration sensitivity of the 500 MHz primary oscillator should be reduced by the open loop gain of the feedback servo. Therefore, if the attack time of the servo is τ = 0.1 ms, then the vibration sensitivity of the locked oscillator at say 100 Hz should be reduced by a factor of approximately 10^4 over the free-running oscillator.

OVERALL PHYSICAL PARAMETERS

Power requirements

The basic electric components of the present standard configuration are shown in Fig. 2. At the present time, power requirements for specific portions are:

(1)	.5 GHz oscillator, .5 GHz amplifier with multiplier	5.5 W
(2)	divider chain (÷ 100)	1.0 W
(3)	detector amplifier and servo	1.0 W
		7.5 W

The .5 GHz power amplifier is the major drain on the power supply. The multiplier step-recovery diode needs about 1 W input, and the efficiency of our present amplifier is about 20 percent. In an actual system we could expect total power requirements to be approximately half of their present value, or ~3 W.

Size requirements

The lower limit on size will primarily be limited by the size of the ammonia cell. It is expected that the cell should occupy no more than 1 liter volume; hence, the overall package may be from 1-2 liters in volume.

Weight requirement

With proper choice of materials the expected final package weight should be less than 3 Kg. For operation in extreme magnetic fields, shielding may have to be included; this will increase weight by approximately 1/2 Kg.

ACKNOWLEDGMENTS

The authors are indebted to Michael B. Mohler for development of the step recovery multiplier and other electronics and to Howard E. Bell for construction of the vacuum and cell components.

REFERENCES

[1] For characterization of frequency stability see, for example: ALLAN, D. W., "Statistics of Atomic Frequency Standards," PROC. IEEE, 54, February 1966, pp. 221-230.

[2] LYONS, H., Annals New York Acad. Sci., 55, 831 (1952).

[3] SHIMODA, K., "Atomic Clocks and Frequency Standard on Ammonia Line I" and "III," J. Phys. Soc. Japan 9, June 1954, pp. 375-386 and pp. 567-575.

[4] HELLWIG, H., "A Review of Precision Oscillators, "National Bureau of Standards Technical Note 662, February 1975.

[5] TOWNES, C. H., SCHAWLOW, A. L., Microwave Spectroscopy, McGraw-Hill Book Co., New York, 1955.

[6] HODOWANEC, G., "Microwave Transistor Oscillators, "RCA Application Note AN 6291.

[7] OXNER, E., "High-Performance FETs in Low Noise Oscillators," Siliconix Incorporated, December 1973.

[8] See, for example:
"Ku-band Step Recovery Multipliers," Hewlett- ackard Application Note 928.
Also:
"Harmonic Generation Using Step Recovery Diodes and SRD Modules," Hewlett-Packard Applications Note 928, 620 Page Mill Road, Palo Alto, CA.

[9] SHIMODA, K., "Ammonia Masers," IRE Trans. Instr. and Meas., IM-11. December 1962, pp. 195-200.

[10] WALLARD, A. D., J. Phys. E., 5, 927 (1972).

[11] See, for example:
VIENNET, J., AUDOIN, C., and DESAINTFUSCIEN, M., "Discussion of Cavity Pulling in Passive Frequency Standards," Proc. 25th Annual Symposium on Frequency Control, U. S. Army Electronics Command, Ft. Monmouth, NJ, April 1971, pp. 337-342.

LIST OF FIGURES

1. Frequency stability plots showing the two sample variance (σ_y) for different averaging times (τ). B.W. $\equiv$ measurement system bandwidth.

2. Simplified block diagram of system. Frequency lock servo is used employing 1-10 kHz FM on ~.5 GHz oscillator.

3. Detailed block diagram of system. Multiplier tuned for $N^{14}H_3$ isotope.

4. Cross-section of stripline resonator.

5. Plot of multiplier output power.

6. Vacuum pumping station.

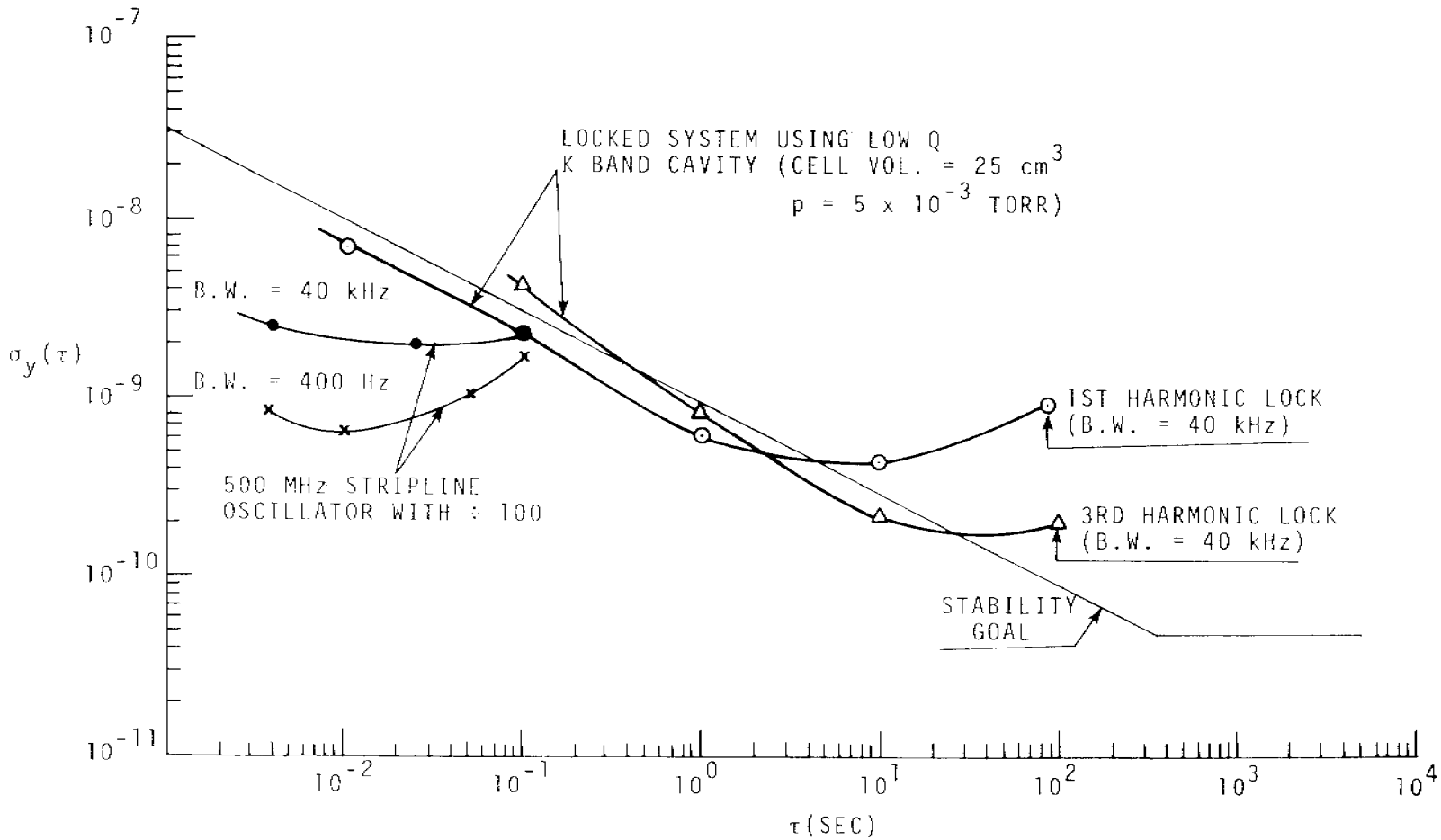
LOCKED SYSTEM USING LOW Q
K BAND CAVITY (CELL VOL. = 25 cm3
p = 5 x 10-3 TORR)
B.W. = 40 kHz
B.W. = 400 Hz
500 MHz STRIPLINE
OSCILLATOR WITH Q 100
1ST HARMONIC LOCK
(B.W. = 40 kHz)
3RD HARMONIC LOCK
(B.W. = 40 kHz)
STABILITY
GOAL
σy(τ)
τ(SEC)
10-7
10-8
10-9
10-10
10-11
10-2
10-1
100
101
102
103
104

Fig. 1

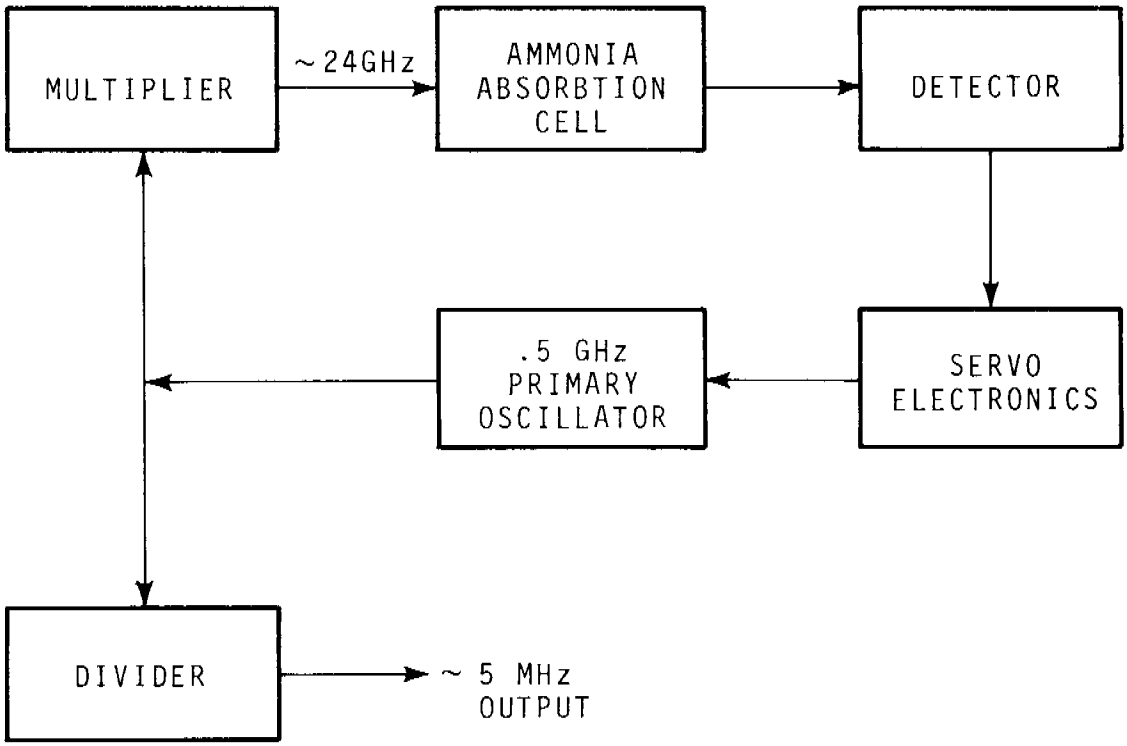
MULTIPLIER
~24GHz
AMMONIA ABSORBTION CELL
DETECTOR
SERVO ELECTRONICS
.5 GHz PRIMARY OSCILLATOR
DIVIDER
~ 5 MHz OUTPUT

Fig. 2

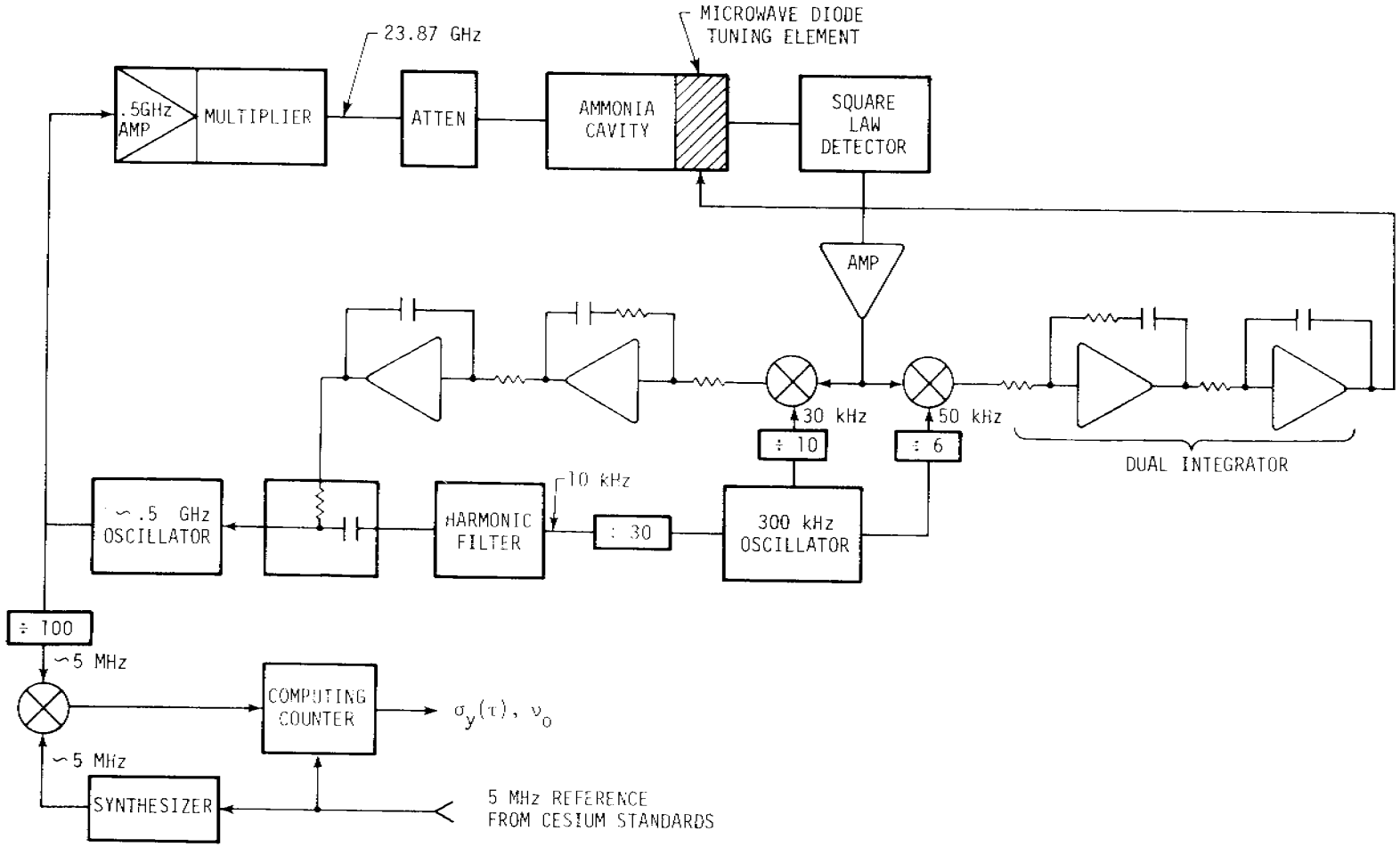
23.87 GHz
MICROWAVE DIODE
TUNING ELEMENT
.5GHz
AMP
MULTIPLIER
ATTEN
AMMONIA
CAVITY
SQUARE
LAW
DETECTOR
AMP
30 kHz
50 kHz
÷ 10
÷ 6
DUAL INTEGRATOR
10 kHz
~ .5 GHz
OSCILLATOR
HARMONIC
FILTER
÷ 30
300 kHz
OSCILLATOR
÷ 100
~5 MHz
COMPUTING
COUNTER
$\sigma_y(\tau)$, ν_0
~5 MHz
SYNTHESIZER
5 MHz REFERENCE
FROM CESIUM STANDARDS

Fig. 3

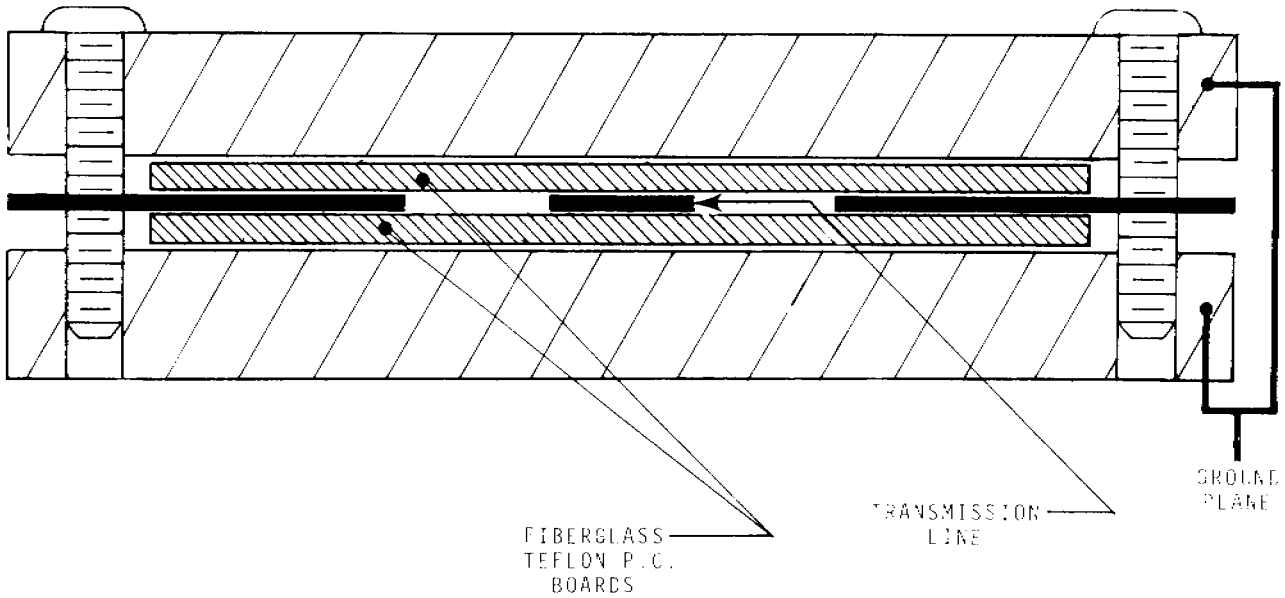
FIBERGLASS
TEFLON P.C.
BOARDS
TRANSMISSION
LINE
GROUND
PLANE

Fig. 4

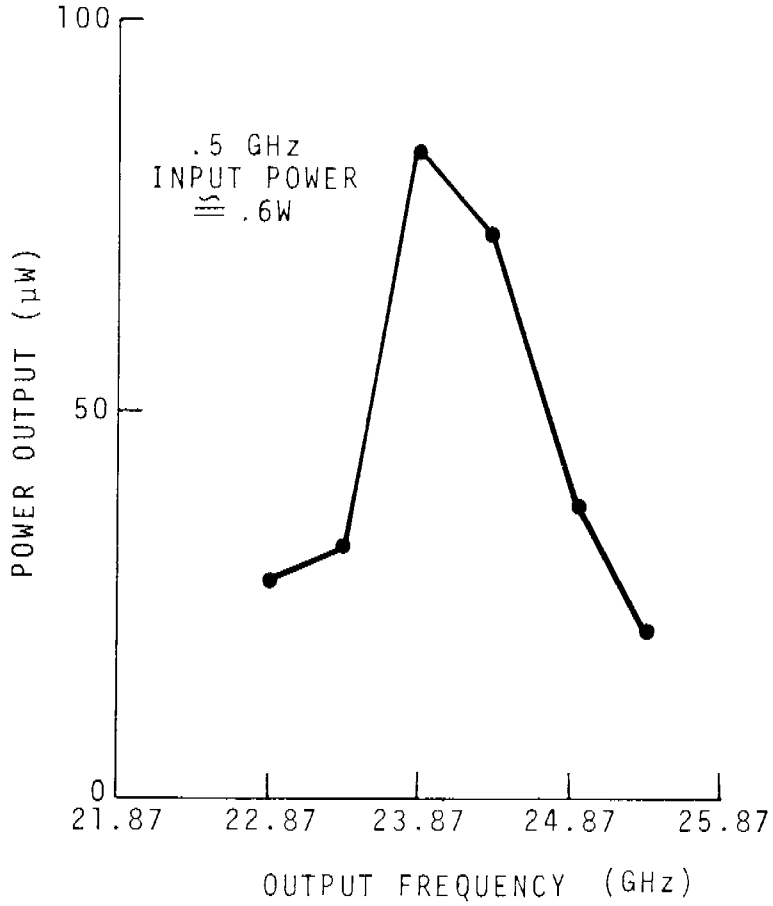
100
50
0
.5 GHz
INPUT POWER
≅ .6W
POWER OUTPUT (μW)
21.87
22.87
23.87
24.87
25.87
OUTPUT FREQUENCY (GHz)

Fig. 5

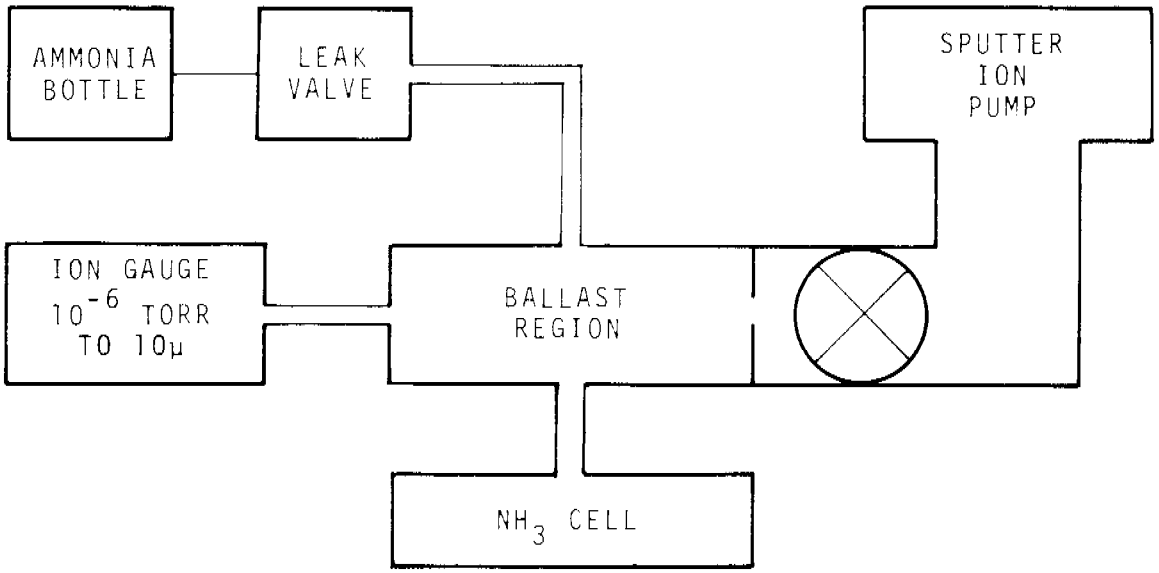
AMMONIA BOTTLE
LEAK VALVE
SPUTTER ION PUMP
ION GAUGE
10^{-6} TORR
TO 10μ
BALLAST REGION
NH_3 CELL

Fig. 6