NTS-2 CESIUM BEAM FREQUENCY STANDARD FOR GPS

J. White, F. Danzy, S. Falvey, A. Frank, J. Marshall
U. S. Naval Research Laboratory, Washington, D.C. 20375

ABSTRACT

NTS-2 is being built by the Naval Research Laboratory. It is scheduled for launch in mid 1977 and will be a part of the demonstration phase of the NAVSTAR Global Positioning Program (GPS). NTS-2 and Air Force Navigational Development Satellites will form a six satellite demonstration system which will permit a thorough evaluation of GPS.

NTS-2 will have two cesium beam frequency standards and will be the first satellite application for this type of atomic standard. Utilizing experience gained from the successful launch of rubidium frequency standards on NTS-1 in 1974 NRL has defined operating specifications for atomic standards in the space environment.

Flight standards are being delivered to NRL for testing. Each unit was subjected to environmental and stability testing at NRL. The temperature qualification range is $-10^{\circ}C$ to $+50^{\circ}C$ in vacuum. The standards are required to pass random vibration. Phase noise and short term stability tests have also been performed.

Additional equipment has been designed and constructed to synthesize the 10.23 MHz signal required to drive the GPS navigation system electronics. In order to compensate for the relativistic effects a device was developed to offset the frequency of the cesium standard.

INTRODUCTION

NTS-2 (Navigation Technology Satellite 2), Figure 1 is being prepared for launch by the Naval Research Lab for the Navstar Global Positioning System (GPS). NTS-2 and the Navigational Development Satellites (NDS) which are being

constructed for the Air Force will form a six satellite constellation for the demonstration Phase of GPS[1]. NTS-2 builds upon the technology developed with NTS-1 which contained two rubidium frequency standards[2,3,4]. Two cesium beam frequency standards were designed and constructed under contract for NRL by Frequency and Time Systems, Inc. These standards are designed to deliver reliable performance in the satellite environment and survive the rigors of launch. NRL has performed extensive testing in both the laboratory environment and the varied environments which could possibly be encountered in launch and on orbit.

In addition to the frequency standard it was necessary to develop additional hardware to interface it to the satellite telemetry control system, the Orbit Determination and Tracking System (ODATS) and the GPS navigation system.

These devices include a direct synthesizer to generate 10.23 MHz for the GPS system, the relativistic synthesizer which creates frequency offsets to compensate for the effects predicted by general relativity and a command interface which translates signals from the satellite telemetry systems into usable control signals for the frequency standards and synthesizers.

CESIUM BEAM FREQUENCY STANDARD DEVELOPMENT

The NTS-2 cesium standards were specified to provide the long term frequency accuracy and stability of existing commercial clocks and to survive and operate in the environment of an orbiting spacecraft. At the time the idea of using a cesium standard in space was first under serious consideration there was considerable speculation in the time and frequency community about whether or not a beam tube with it's precision mechanical alignments could be made sturdy enough to withstand a launch environment in the 20 to 30 grms range. Accordingly, the earliest efforts in the program were directed primarily towards the goal of vibration qualification. Under NRL contract Frequency and Time Systems embarked upon a program to produce a vibration qualified version of their FTS-1 beam tube. During 1974 tubes were built by FTS and tested at NRL to identify and correct vibration sensitive areas of the tube. On March 1, 1975, a tube passed 23 grms random vibration in three axes with no significant failures observable in limited performance testing at NRL. That tube was returned to FTS for analysis and was found to be operating nominally. Figure 2 lists the pre and post vibration performance. Work on the

electronics which was under way at FTS continued toward the goal of clock operation with the qualified beam tube with interface for remote monitoring and command control through the satellite telemetry. A brassboard model of the proposed flight frequency standard was constructed at FTS and delivered to NRL for testing in the spring of 1975. While the brassboard was not mechanically designed for flight vibration tests it was in all other respects designed to meet flight specifications. It was tested at NRL to measure it's short term stability, phase noise, electrical characteristics, and environmental performance. The period of testing ran through the summer of 1975 and resulted in several improvements in the basic design. A summary of the brassboard's performance is shown in Figure 3. As reflected in the data the stability of the standard appeared to have a flicker floor of about $5x10^{-13}$. Since this was above the contract specification of $2x10^{-13}$ the matter was investigated by FTS and improvements resulted which have ultimately reduced the flicker floor for the brassboard to about $1x10^{-13}$. Long term frequency drift over a period of seventy days was curve fit by computer to be less than $2x10^{-15}$/day. The changes made to the brassboard design were incorporated into the units built for NTS-2. These units are designated as prototypes. Four units have been built and delivered. Of these, one unit (serial number 4) was used as a qualification unit and was subjected to qualification levels of environmental testing. Units numbered 3 & 5 have been designated as flight units for NTS-2 and the remaining standard (Number 2) is the backup unit. Figures 4 and 5 show one of the prototypes.

THEORY OF OPERATION

The basic operating principle of the cesium standard is similar to most other cesium clocks[6]. The user's output signal (5.000 MHz) is obtained from a high-quality voltage-controlled quartz crystal oscillator, and the frequency of this oscillator is regulated by comparison with the cesium hyperfine transition. The accuracy and long-term stability of the output frequency are determined by the cesium tube, while the short-term stability (outside the bandwidth of the frequency-control servo loop) is obtained from the quartz "flywheel" oscillator (figure 6).

The cesium beam tube utilized is a standard FTS-1 tube modified to survive the mechanical shock and vibration environment of the satellite launch. The width of the cesium resonance in this tube is approximately 500 Hz at a

center frequency of 9192 MHz. In the servo system, square-wave phase modulation is used. The modulation frequency is chosen approximately equal to the resonance line width, where the second harmonic signal is theoretically zero, and the amplifier gain and filtering requirements are therefore set only by noise considerations. All of the usual tuned, narrow-band, audio filter circuits have been eliminated or replaced by commutating filters. Thus, the servo system has been made relatively insensitive to drift and gain variations; all essential circuit functions are synchronous. Another important and unusual feature of the servo loop is the integrator in the error signal path. The time constant of this integrator helps determine the overall bandwidth of the servo system, and hence the crossover between short-term crystal stability and long-term cesium control. Both the long time constant and low leakage requirements are satisfied in the system through the use of a hybrid analog/digital integrator circuit. The principle of this hybrid approach is shown in Figure 7. The analog integrator has a relatively short time constant (0.033 sec. in the unit) so that leakage effects are unimportant. The effective integration time constant of the hybrid circuit, however, is this value multiplied by the maximum digital count (4096) or 140 seconds. The overall servo loop time constant under these conditions is 10 sec. The hybrid integrator circuit also offers a convenient interface for direct digital control of the quartz oscillator, when the cesium loop is inactivated.

The 5 MHz crystal oscillator used in the standard is a special ruggedized version of the Oscilloquartz B-5400 commercial oscillator. This modified design has met all the shock, vibration, temperature and other environmental requirements of the satellite specification while at the same time exhibiting electrical performance and stability equal to or better than that of the B5400. A special output amplifier design permits multiple, highly buffered, independent outputs with considerable reduced primary power consumption.

The internal functions of the standard may be monitored remotely by means of the satellite telemetry system. The monitors on these parameters are scaled to a 0 to +5 VDC output and are brought to a connector for interfacing to the satellite. The functions available are:

control voltage
c-field
C_s beam current

ionizer current
C_s oven temperature
ion pump current
electron multiplier voltage
lock indicator
power on indicator
synthesizer lock indicator
quartz oven temperature

These monitors are continuously available.

TESTING

Upon arrival at NRL each standard went through a rigorous testing sequence. Unit number 4 (designated as qualification standard) was subjected to full qualification level vibration and the full qualification temperature range. The remaining units were required to meet acceptance levels. All units were tested to see that stability, noise, power, weight and interfacing specifications were met. The test sequence was intended to give earliest possible indication of failure in those areas where least was known about its performance or durability. Four separate vibration tests comprising about 16 minutes of time on the shake table were done on the qual unit. The NTS-2 random vibration specification calls for an overall level of 18.5 grms (13.1 grms for acceptance) with a maximum input of .170 g^2/Hz (.085 g^2/Hz for acceptance) in the frequency range of 100 to 2000 Hz in power spectral density. Because the NTS-2 mission does not require that the cesium standard be operational during the launch phase the testing is done with only the quartz oscillator and ion pump portions of the standard operating. All four prototypes have passed vibration. The two flight units will be subjected to acceptance level vibration in the acoustic test of the assembled spacecraft.

Similarly the thermal vacuum test qualification was done before any flight unit was tested in the vacuum chamber. The NTS-2 specifications require that the frequency standard operate in vacuum over the temperature range of -10 degrees centrigrade to +45 degrees centigrade (0 to +40 for acceptance). The required long term stability should be met even when the baseplate temperature varies by up to 4 degrees/day at a rate no greater than 5 degrees/hour. Other functions of the standard such as warm up under hot and cold conditions, function of commands, and input and output power levels were checked in vacuum. As an example figure 8 shows DC power versus temperature

for the brassboard. Figure 9 is a summary of thermal vacuum test data. Because brassboard testing in vacuum had been completed and design corrections incorporated into the prototype design there were no major problems encountered in this phase of testing. However, because the mechanical structure was somewhat changed from the brassboard a serious study was made of the thermal design. The results of that work will be presented at a later date (7). Short term stability was measured on all units for averaging times ranging from about one second to as long as 100,000 seconds as test times permitted. The qual unit has been sent to the National Bureau of Standards for long term testing. At both NBS and NRL quality quartz oscillators were used for the shorter averaging times and option 004 cesium standards as references for the longer terms. A graph summarizing the data is included as figure 10.

Single sideband phase noise was measured at NRL on all four units using an Oscilloquartz B-5400 as reference. As expected for this type of clock the spectral density was essentially that of the quartz oscillator. Figure 11 shows the results for the designated flight units.

All standards were tested in the Laboratory and thermal vacuum environment to insure that the power consumption, remote tuning capabilities, and command functions operated properly. This included c-field tuning curve measurements, quartz oscillator tuning measurements, spectrum analysis of harmonic and spurious outputs. As an example figure 12 shows quartz oscillator tuning curves for units three and five.

COMMAND INTERFACE UNIT

The command interface unit was designed to address and control the frequency standards from the ground control station via the telemetry system. This unit was designed to have full redundancy including power crossover.

The interface takes the commands that have a magnitude of 27 volts, pulse width of 50 milliseconds, and rise and fall times of one millisecond and converts them to transistor-transistor-logic (T^2L) which is compatible to the frequency standard system. Tuning for the frequency standards is accomplished by taking serial command bits and converting them to parallel tuning words. A monitor is provided to look at the tuning words and at the state of other discrete points in the system.

The command interface unit, diagrammed in figure 13, takes the commands from the Integrated Command and Telemetry System (ICATS) and shapes the commands, not used for relay operations, through a Schmitt limiter circuit into T^2L compatible pulses. The commands used for switching latching relays are direct coupled to the relay selenoid with diodes mounted across the relay solenoid for reverse voltage suppression.

The initial preset command should always be the first command after power is supplied to the command interface unit to initialize the unit to nominal operation mode. The control commands operate latch circuits for the specific requirement with the output of the latch circuit output remaining at "0" or "1" until the complimentary command is transmitted which toggles the latch.

The interface points are listed in the NTS-2 connector identification list under box A404 (Frequency Standard Command Interface).

REGISTERS

The unit has seven redundant registers which are identified as follows:

Load registers
Relativistic offset generator register
FS #1 C field transfer register
FS #1 Quartz transfer register
FS #2 C field transfer register
FS #2 Quartz transfer register monitor status register.

The load register is a serial register containing 16 bits. A tuning enable command must precede a desired combination of 16 tuning load "1" or tuning load "0" commands. The first tuning load bit is the lowest significant bit (LSB) with each succeeding bit increasing in power until the 16th bit which is the most significant bit (MSB). Bit positions 1 through 12 contain the desired tuning word, bit positions 13 through 15 contain the identification address (ID) bits and bit position 16 is the tuning enable (1) or disable (0). The tuning enable command switches the monitor gate circuitry to monitor the load register for verification of the loaded data word.

The data word is then parallel loaded into the addressed transfer register with the transfer execute command. The

transfer execute command switches the monitor gate circuitry to look at the addressed transfer register for verification of the loaded data word. The data word is next shifted into the frequency standard addressed storage register with the storage register execute command and remains in the transfer register for later recall.

The monitor status register and any of the transfer registers may be monitored at any time by sending a register monitor select enable command, four tuning load "1" or tuning load "0" to make up the required ID address, and a register monitor select execute.

RELATIVISTIC OFFSET PULSE GENERATOR

The input 0.5 MHz frequency from the Relativistic Synthesizer unit is divided by 2^7 and then divided by 2^8 producing the input frequency plus eight divided frequencies. These nine frequencies are then pulse subtracted and gated with the desired offset setting in an eight bit relativistic offset generator register to produce 256 discrete number of pulses per unit time. This output is then divided by 2^3 producing 1.907 pulses per second to 488.28 pulses per second in incremental steps of 1,907 pulses.

The output of this pulse generator is harnessed to the relativistic synthesizer unit on two lines where either line may be active by selection of the relativistic offset select positive or negative command. The positive or negative refers to the relativistic synthesizer output frequency. The pulse generator may be inhibited with the relativistic offset off command or-turned on with the relativistic offset on command.

POWER

DC power for the command interface unit is provided by the 5.5 VDC regulators with crossover redundance accomplished by switching.

RELATIVISTIC SYNTHESIZER

The NTS-2 program office at NRL was tasked by GPS NAVSTAR program office to generate a 10.23 MHz frequency for use with the Pseudo Random Noise System (PRNSA) onboard the NTS-2 Satellite. Frequency requirements for the NTS-2 Orbit Determination and Tracking System (ODATS) was 5 MHz with a tunable ΔF offset of approximately $+1 \times 10^{-9}$ with a

resolution of approximately 3×10^{-12}. The ΔF offset was to compensate for relativistic effects and could not be accomplished by offsetting the cesium standard which has a tuning range of $\pm 1 \times 10^{-11}$. The relativistic offset was later added to the 10.23 MHz requirement.

RF inputs are the two 5 MHz signals from the two cesium frequency standards which are selectable, by a relay to use either of the two standards and still have the other standard in a powered mode. The positive and negative offset pulses to control the ΔF are redundant and go through exclusive rf gates to allow for crossover redundancy.

RF outputs are redundant 5 MHz $\pm$ ΔF for ODATS, redundant 10.23 MHz $\pm$ ΔF to the 10.23 MHz VCXO unit, redundant 0.5 MHz to the command interface unit for deviation of the positive and negative offset pulses, 42.82 KHz zeeman frequency for the frequency standards, and 5 MHz to the ICAT system.

Primary DC power is 27 VDC on either one of the two power lines but not both simultaneously. An output 5.5 VDC is provided for the command Interface Unit on one of two lines but not both simultaneously being consistent with the 27 VDC input.

The basic operating principle of the relativistic offset synthesizer may be compared to rotating a phase vector by means of a coherent motor driven resolver. Figure 14 shows a block diagram. Pulses are coherently added to or subtracted from the input 5 MHz pulse chain at a settable number of pulses per unit time for the desired offset.

The input 5 MHz signal is shaped into approximately a 50 percent waveform with the negative edge triggering a pulse generator and the positive edge controlling the insertion of pulses. The output of the pulse generator and the inserted pulses are gated to produce the nominal 5 MPPS plus the inserted pulses, if desired, in a pulse chain. This pulse chain is gated with an omission pulse, if desired, to omit pulses from the pulse chain. This pulse chain is divided and heterodyned with the input signal in a series of steps to obtain the desired integration or phase shift per insertion or omission of pulses. The division ratios in the NTS-2 unit is 131,220 to 1 in six stages of division and heterodyning. The output frequency is 5 MHz $\pm$ ΔF. ΔF range and resolution is 7.44×10^{-10} and 2.91×10^{-12} respectively.

The 5 MHz to 10.23 MHz synthesizer is a direct frequency synthesis technique incorporating digital and linear logic. This technique of frequency synthesis assures the output frequency stability is directly related to the reference or input frequency. The synthesis derivation is

$$[(5 \div 5 \times 3 \div 4 + 5) \div 5 + 5] \div 5 + 5 \div 5 \times 9 = 1.23 + 9.0 = 10.23.$$

Circuitry used in the synthesis is a hybrid of digital and linear logic, see figure 15.

The Zeeman frequency generator is non redundant in the NTS-2 unit. The purpose of the Zeeman frequency is an attempt to make a measurement of the relativistic effects of the satellite clock. Using the Zeeman to set the cesium standard to atomic time should be > 2 orders of magnitude better resolution than the calculated relativistic offset for the NTS-2 satellite orbit.

The Zeeman generator is a direct digital frequency synthesis with an op-amp filtered output. The reference frequency is 1 MHz which is derived from the input 5 MHz. The synthesis derivation is

$$\{1 + [1 \div 4 + (1 \div 1 \div 5) \div 25] \div 4\} \div 25.$$

The Zeeman frequency is switchable on-off, and between the two frequency standards by relays which are commanded through the telemetry command system.

The 10.23 MHz VCXO was added to the system to meet the GPS phase noise specification when the relativistic offset was on. The circuitry is a basic phase lock loop (PLL) controlling a voltage control crystal oscillator (VCXO). The reference frequency to the PLL is the direct synthesized 10.23 MHz which is derived from the cesium standard plus or minus the direct synthesized relativistic offset frequency. The unit is fully redundant by selecting the appropriate power on command.

The PLL incorporates a balanced mixer used as a phase detector. The synthesized 10.23 MHz plus or minus the relativistic offset, with the stability of the cesium frequency standard, is phase compared with the VCXO RF output. The proportional DC voltage output of the phase detector is fed into an analog integrator. The analog integration is an operational amplifier where the bias voltage is set to the nominal VCXO control voltage. The gain of the amplifier is 30 and has an integrator response

time of 3 seconds. The output of the analog integrator is the control voltage for the VCXO unit. Figure 16 shows the circuit.

The VCXO unit was designed by Frequency Electronics Incorporated for satellite system use. The unit meets all frequency stability, phase noise, electrical and environmental characteristics requirements for use in NTS-2.

RF AMPLIFIERS

The RF amplifier takes the + 3dBm 10.23 MHz signal from the VCXO unit and amplifies this signal by 15 dB to + 18 dBm output.

POWER

This unit is powered from the same secondary switched points as unit A403. Unit A is powered when RSCI A is selected and Unit B is powered when RSCI B is selected.

ACKNOWLEDGEMENTS

The authors wish to thank the following people for their many contributions to this work: Robert Kern and Tom Gregory of Frequency and Time Systems and C A. Bartholomew, Robert Hersh, Wayne Lloyd, Robert Moore and Stephen Nichols of the U. S. Naval Research Laboratory.

REFERENCES

1. GPS NAVSTAR Global Positioning System, Astronautics and Aeronautics, Volume 14, Number 4, April, 1976.

2. Performance of a Rubidium Standard For Space Environment, Nichols, et al, National Telemetry Conference, 1973.

3. Satellite Application of a Rubidium Frequency Standard, Nichols, et al, 28th Annual Symposium On Frequency Control, 1974.

4. Design and Ground Test of the NTS-1 Frequency Standard System, Nichols et al, NRL Report Number 7904, 1975.

5. A New Compact Cesium Beam Frequency Standard, Graf, Johnson, and Kern, Symposium on Frequency Control, 1975.

6. Final Prototype Report, Navy Contract, N00014-74-C-0061, 29 April, 1976.

7. Thermal Vacuum Testing Techniques for Spacecraft, S. A. Nichols, to be presented at the 9th Space Simulation Conference, Los Angeles, CA, April 1977.

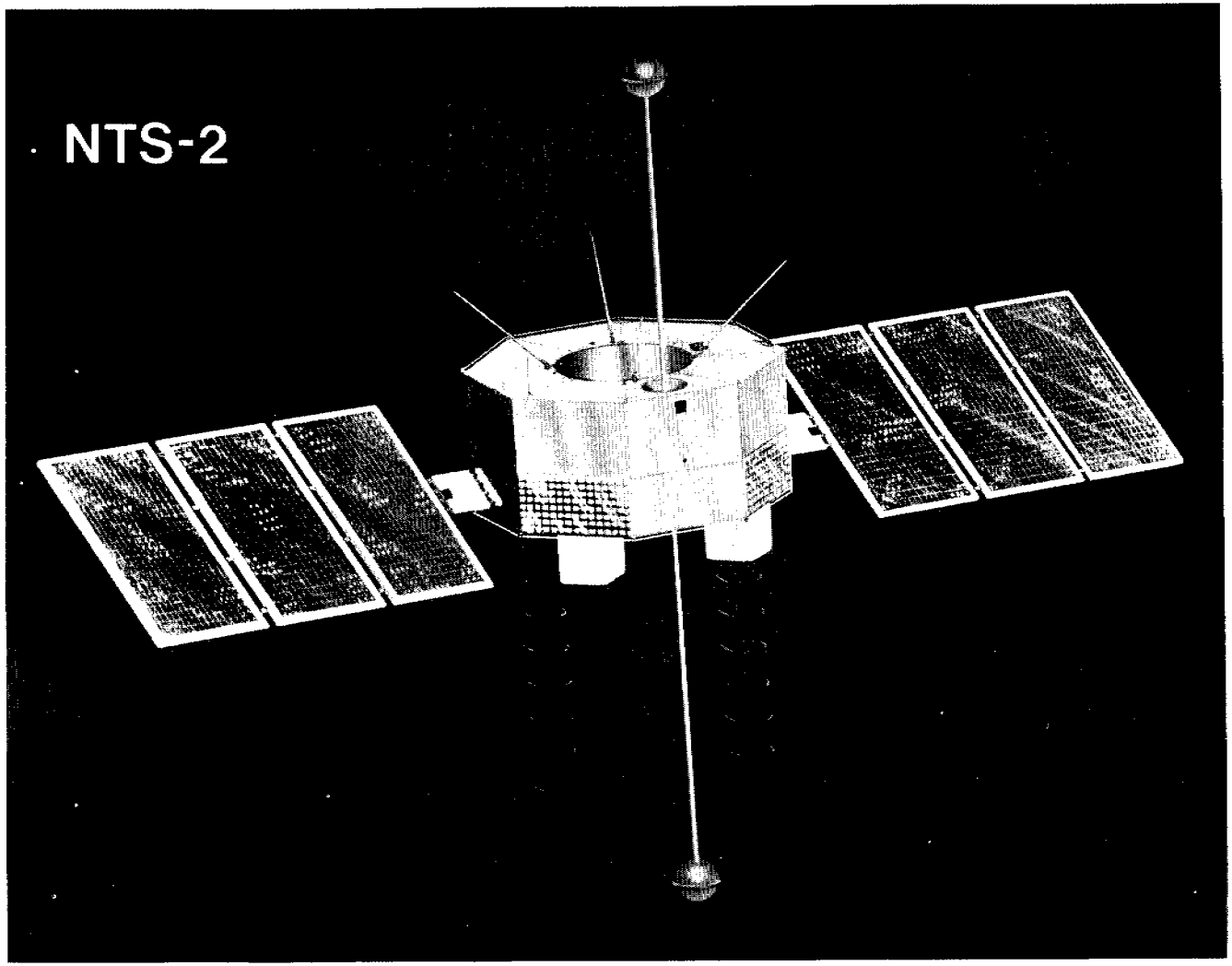

Figure 1

FTS TUBE ANALYSIS

PARAMETER	PRE SHAKE	POST SHAKE
ACCURACY $\left(\frac{\Delta f}{f}\right)$	$< 1 \times 10^{-11}$	$< 1 \times 10^{-11}$
FLOP/BACKGROUND RATIO	12:1	12:1
SIGNAL TO NOISE RATIO	1900*	1850*
LINE WIDTH	447*	454*
FIGURE OF MERIT	4.3*	4.0*
I SIGNAL	2.5×10^{-8}	2.2×10^{-8}
I DARK CURRENT	10–12	10–12
I ION PUMP	1 ua	1 ua**
FULL RESONANCE SPECTRUM		NO CHANGE

*DIFFERENCES IN THESE VALUES ARE WITHIN THE RESOLUTION OF OUR PARTICULAR TEST APPARATUS.

**AFTER SHAKE, A VACUUM LEAK IN A MICROWAVE WINDOW METAL TO METAL BRAZE CAUSED A RATE OF RISE IN INTERVAL TUBE PRESSURE. ALTHOUGH UNDESIRABLE, THE MAGNITUDE OF THE LEAK WOULD NOT INHIBIT NORMAL OPERATION IN EARTHS ATMOSPHERE. LEAK STOPPED AT NRL – ADDITIONAL QC STEPS NOW IN FORCE TO AVOID ANY POSSIBLE REPETITION IN FUTURE TUBES.

Figure 2.

BRASSBOARD TEST DATA

SHORT TERM STABILITY

AVG. TIME (Sec)	$\sigma(2, \tau) * 10^{12}$
1	3.2
10	1.8
100	3.1
1,000	1.5
10,000	.6
50,000	.55

PHASE NOISE 1 Hz BW

OFFSET (Hz)	L (f)
1	− 117
10	− 139
100	− 137
1,000	− 141
5,000	− 142

THERMAL COEFFICIENT

$7.5 * 10^{-15}/°C$ OVER +5°C TO +25°C

DC POWER

AIR	22.4 AMBIENT TEMP ~ 25°C
VACUUM	19.4 WATTS AT 25°C

C-FIELD TUNING 1.4×10^{-13}/TUNING BIT

Figure 3

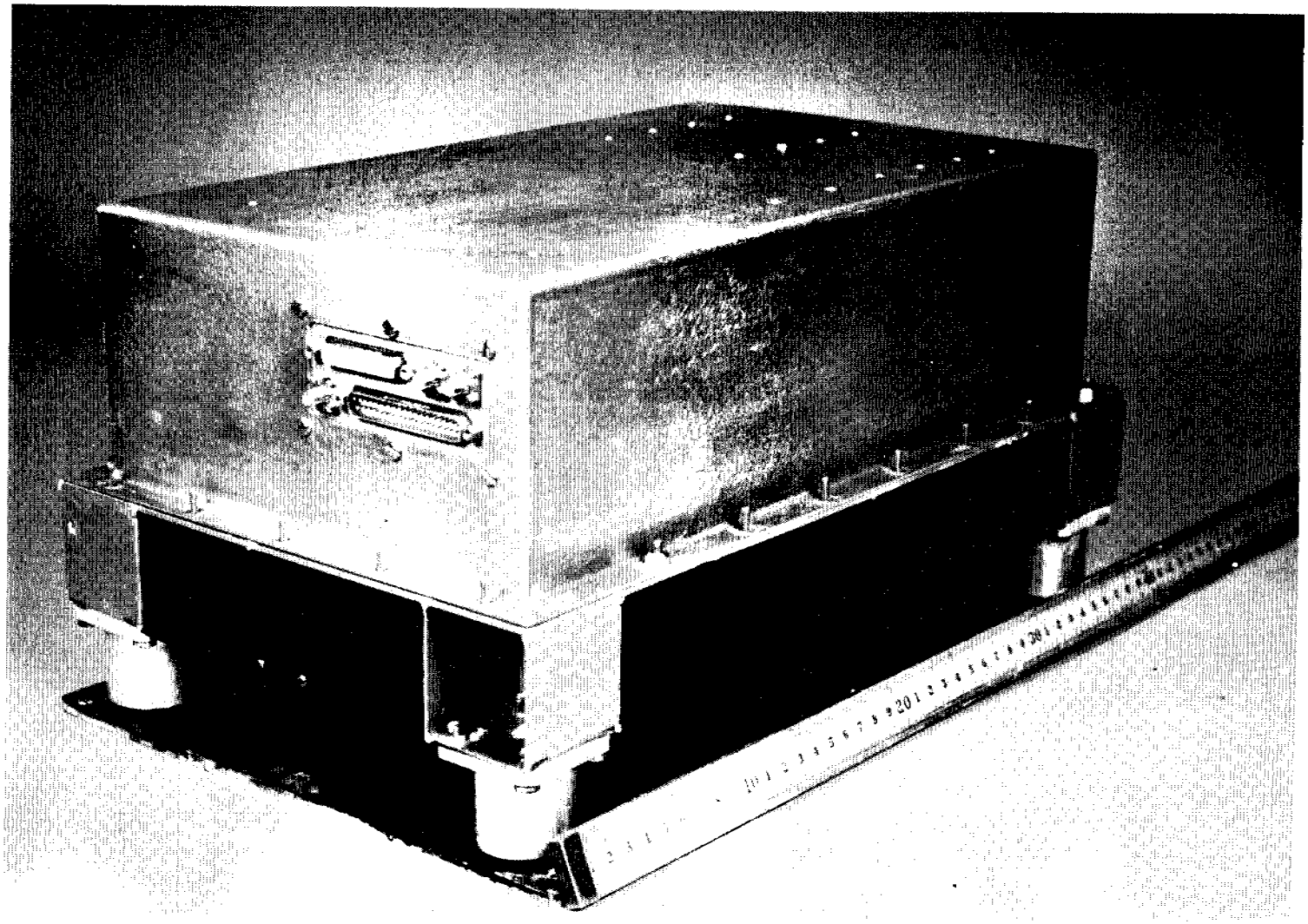

Figure 4

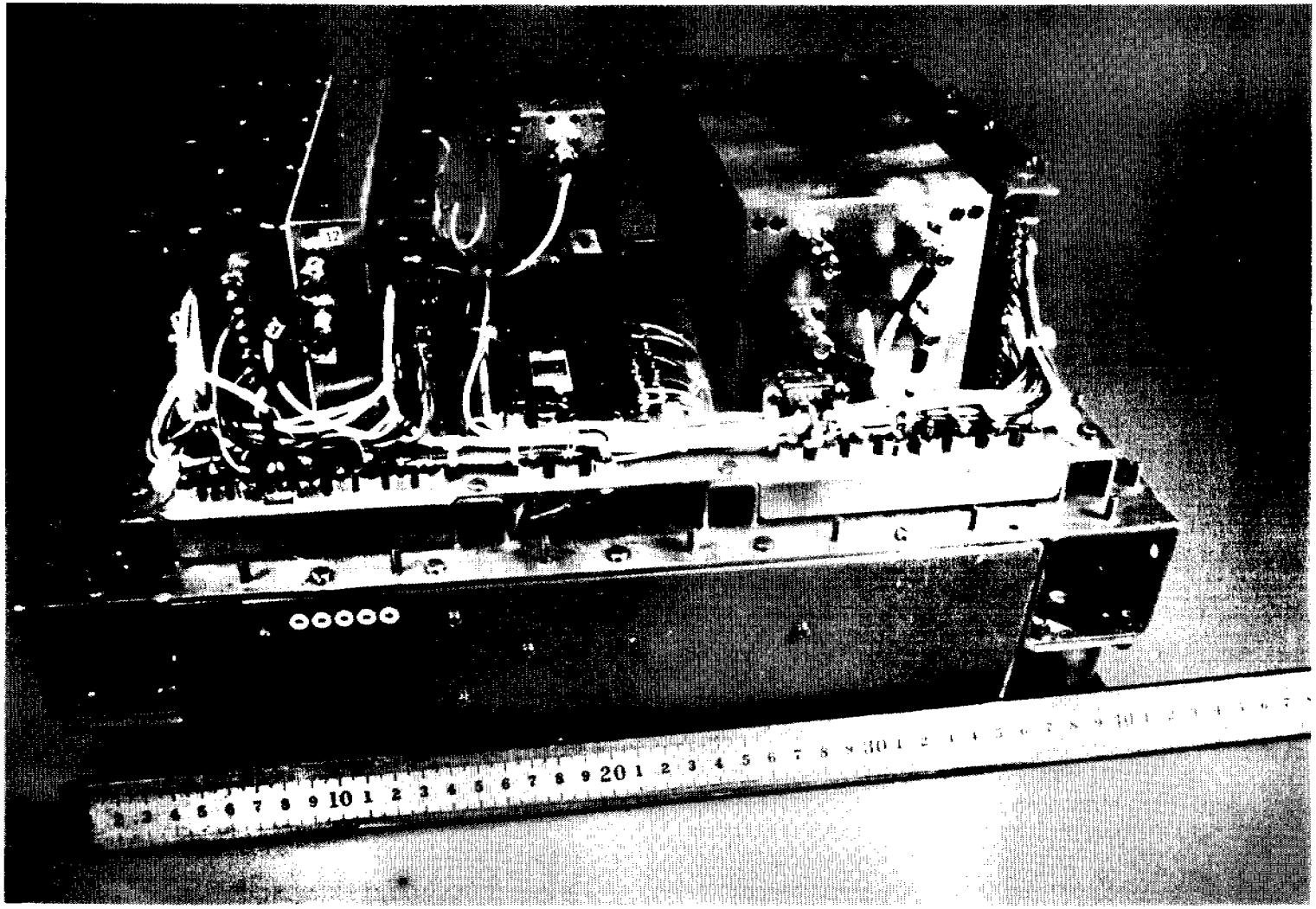

Figure 5

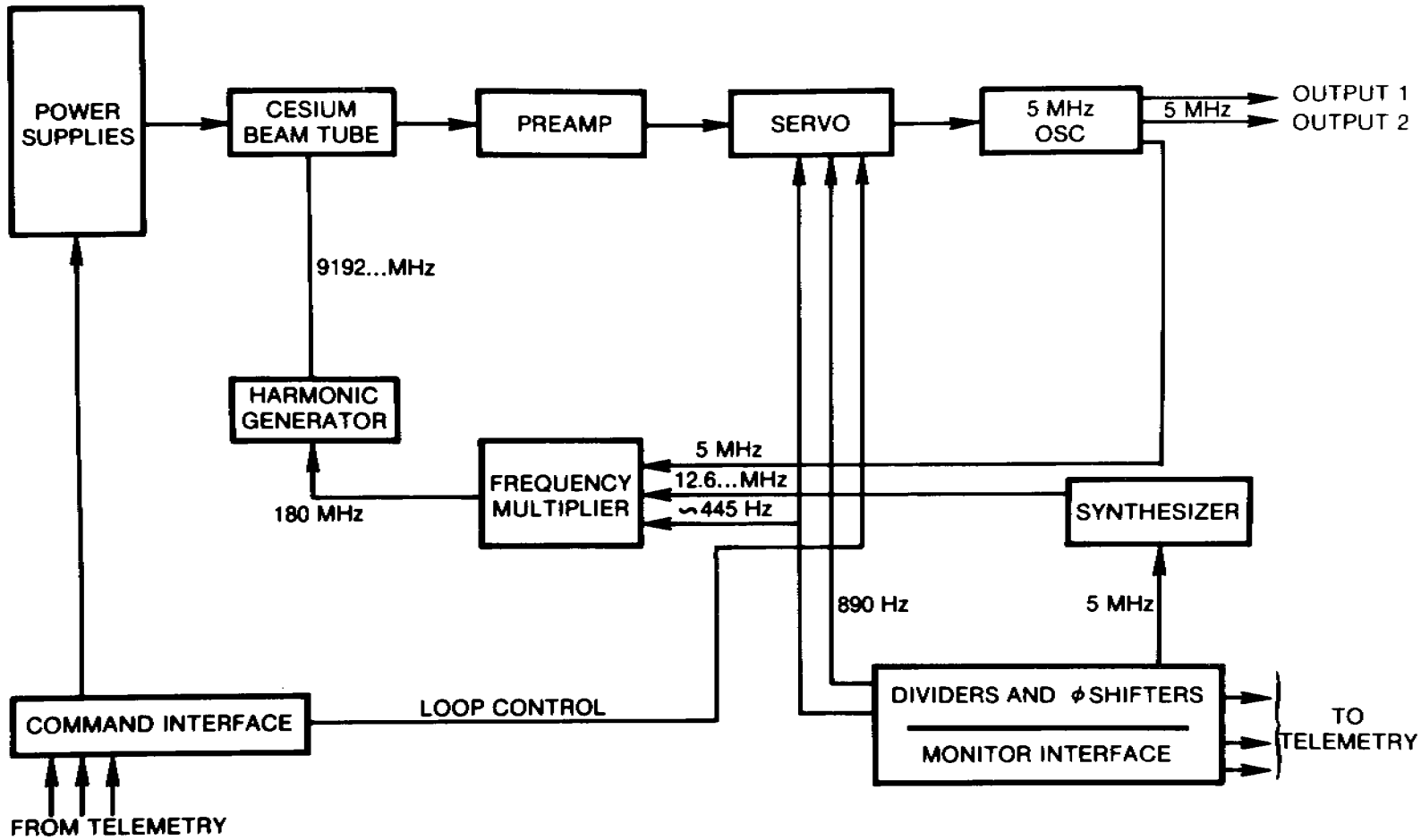

Cs STANDARD BLOCK DIAGRAM

Figure 6

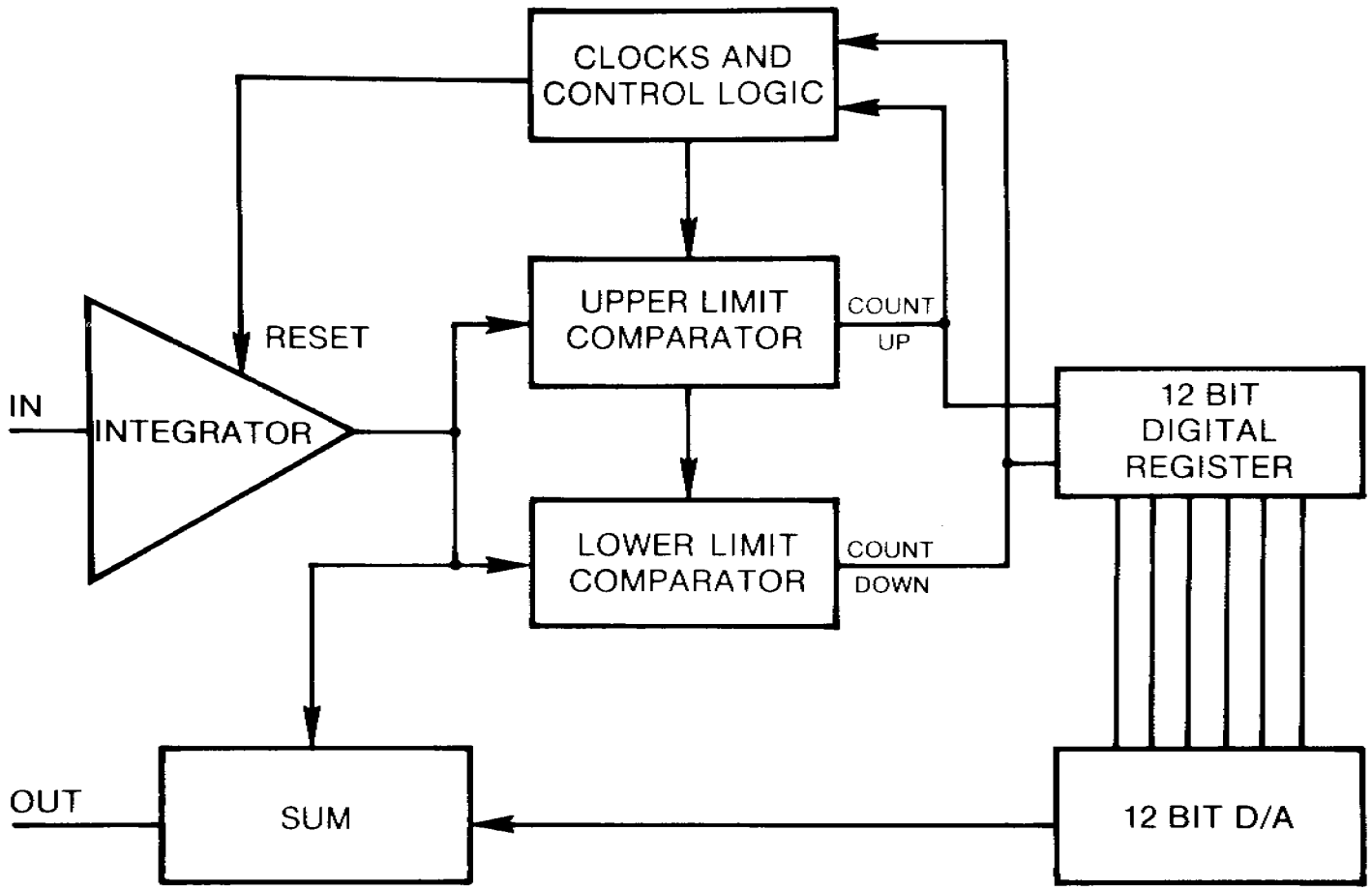

DIGITAL INTEGRATOR

Figure 7

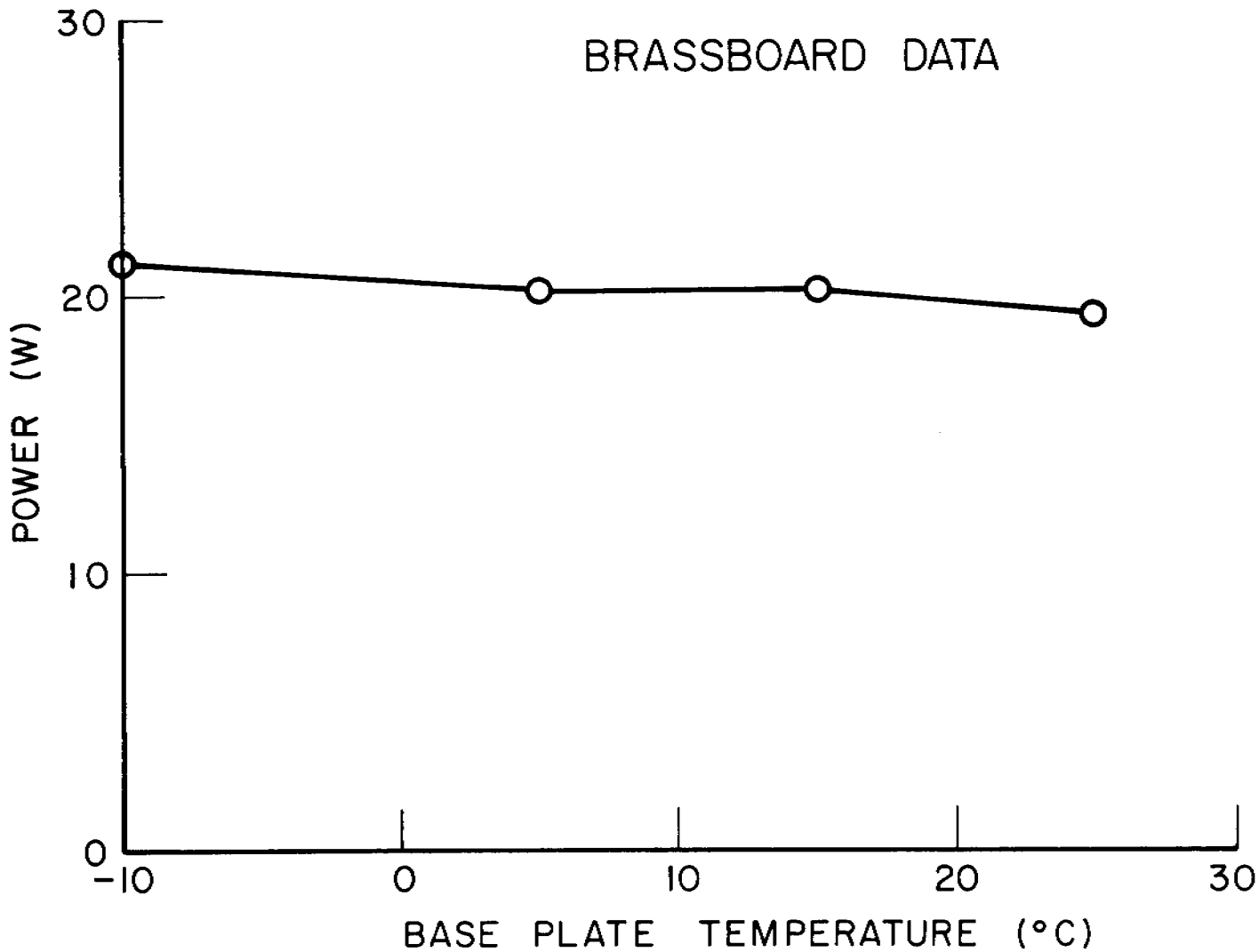
BRASSBOARD DATA
POWER (W)
30
20
10
0
-10
0
10
20
30
BASE PLATE TEMPERATURE (°C)

Figure 8

PROTOTYPE PERFORMANCE DATA

	PRO-2	PRO-3	PRO-5
C-FIELD TUNING		1.5×10^{-13}/BIT	1.3×10^{-13}/BIT
TEMP COEFFICIENT IN VACUUM	3.7×10^{-14}/°C	1.2×10^{-13}/°C	6.0×10^{-14}/°C
DC POWER			
AIR	20.7 W	22.0 W	22.0 W
VACUUM	20.3 W	20.8 W	21.6 W

Figure 9

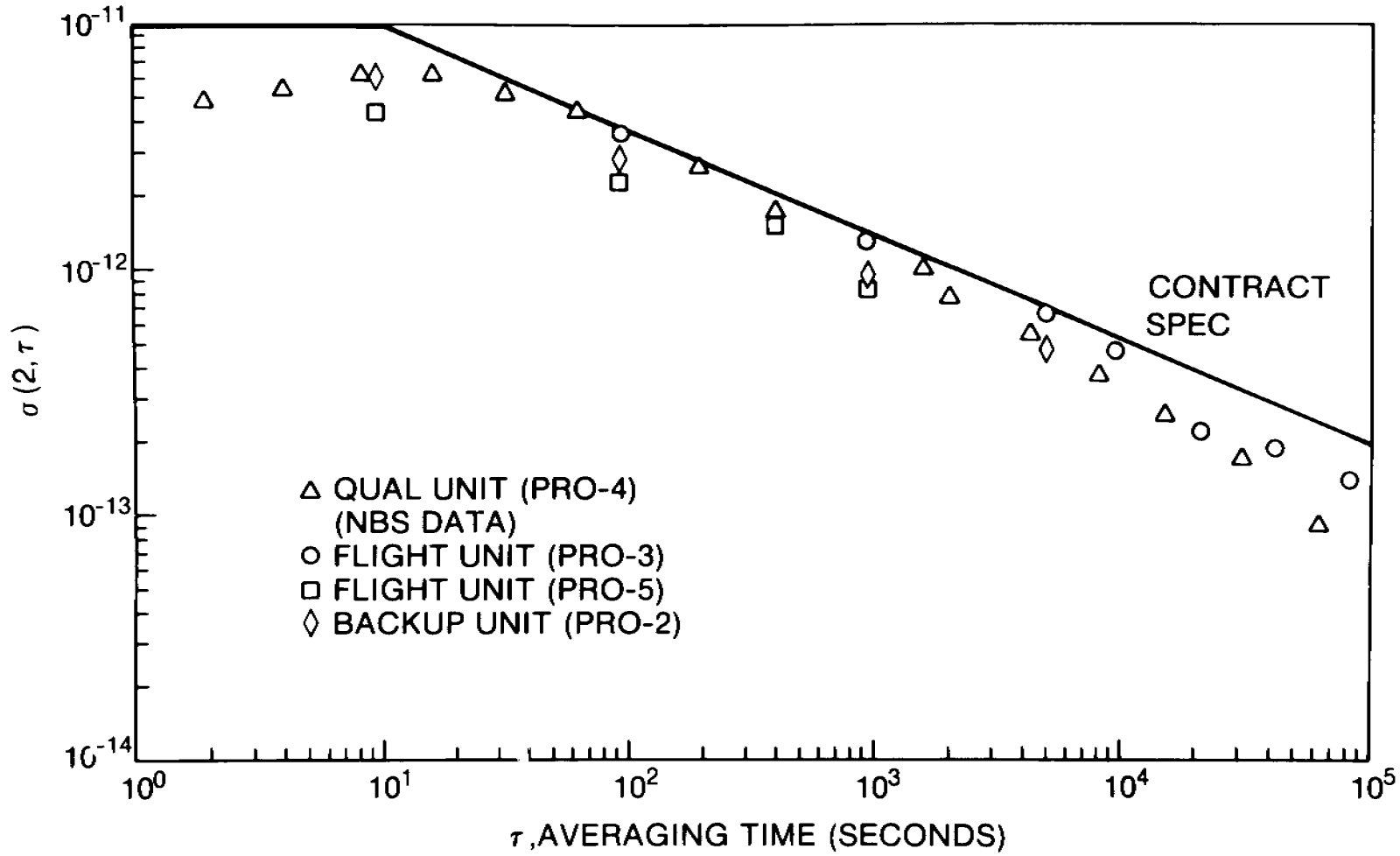
10^{-11}
10^{-12}
10^{-13}
10^{-14}
$\sigma(2,\tau)$
CONTRACT SPEC
△ QUAL UNIT (PRO-4) (NBS DATA)
○ FLIGHT UNIT (PRO-3)
□ FLIGHT UNIT (PRO-5)
◊ BACKUP UNIT (PRO-2)
10^0
10^1
10^2
10^3
10^4
10^5
τ, AVERAGING TIME (SECONDS)

Figure 10

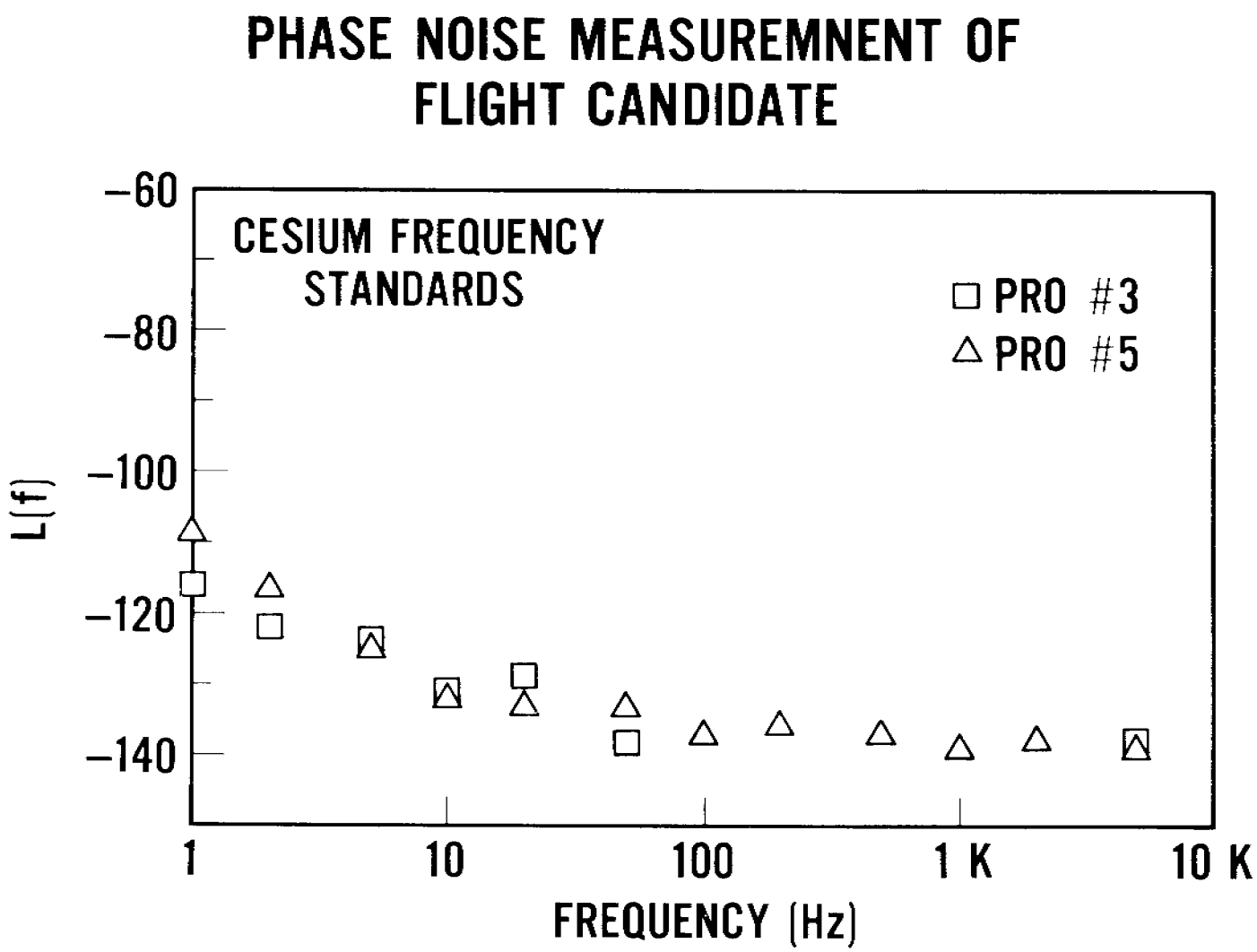
PHASE NOISE MEASUREMNENT OF
FLIGHT CANDIDATE
CESIUM FREQUENCY
STANDARDS
PRO #3
PRO #5
L(f)
−60
−80
−100
−120
−140
1
10
100
1 K
10 K
FREQUENCY (Hz)

Figure 11

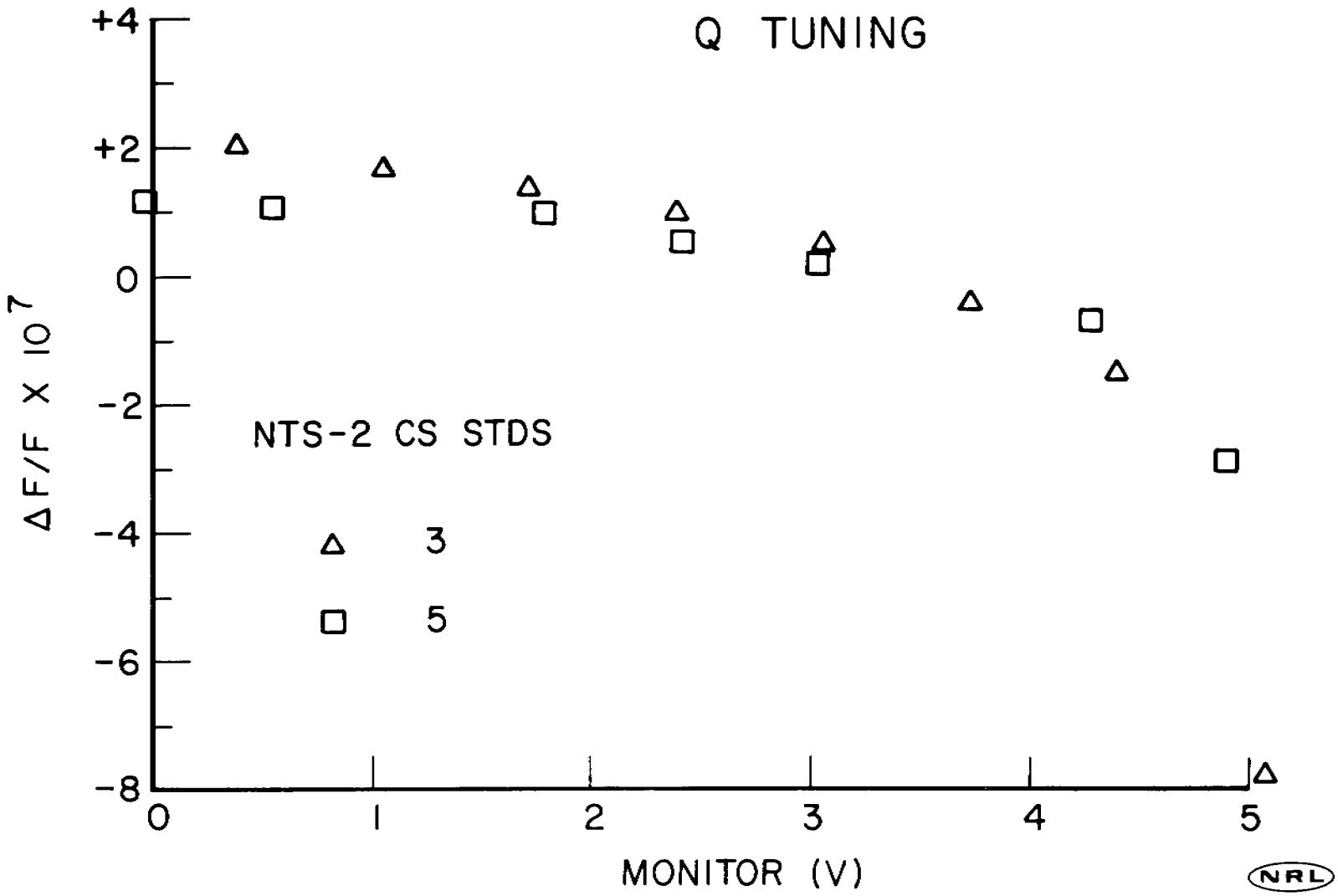
Q TUNING
+4
+2
0
-2
-4
-6
-8
ΔF/F X 10^7
NTS-2 CS STDS
3
5
0
1
2
3
4
5
MONITOR (V)
NRL

Figure 12

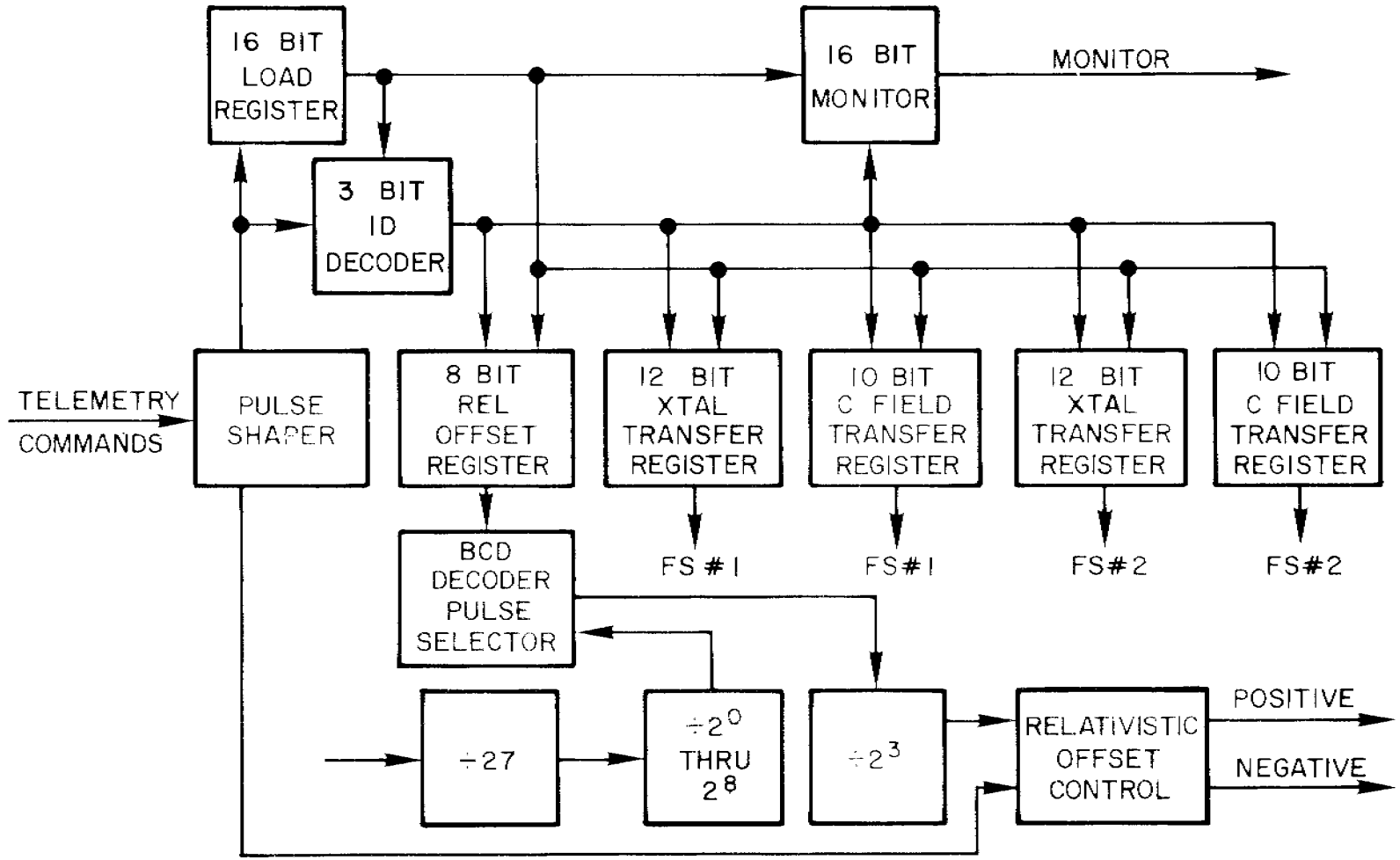

FREQUENCY STANDARD COMMAND INTERFACE

Figure 13

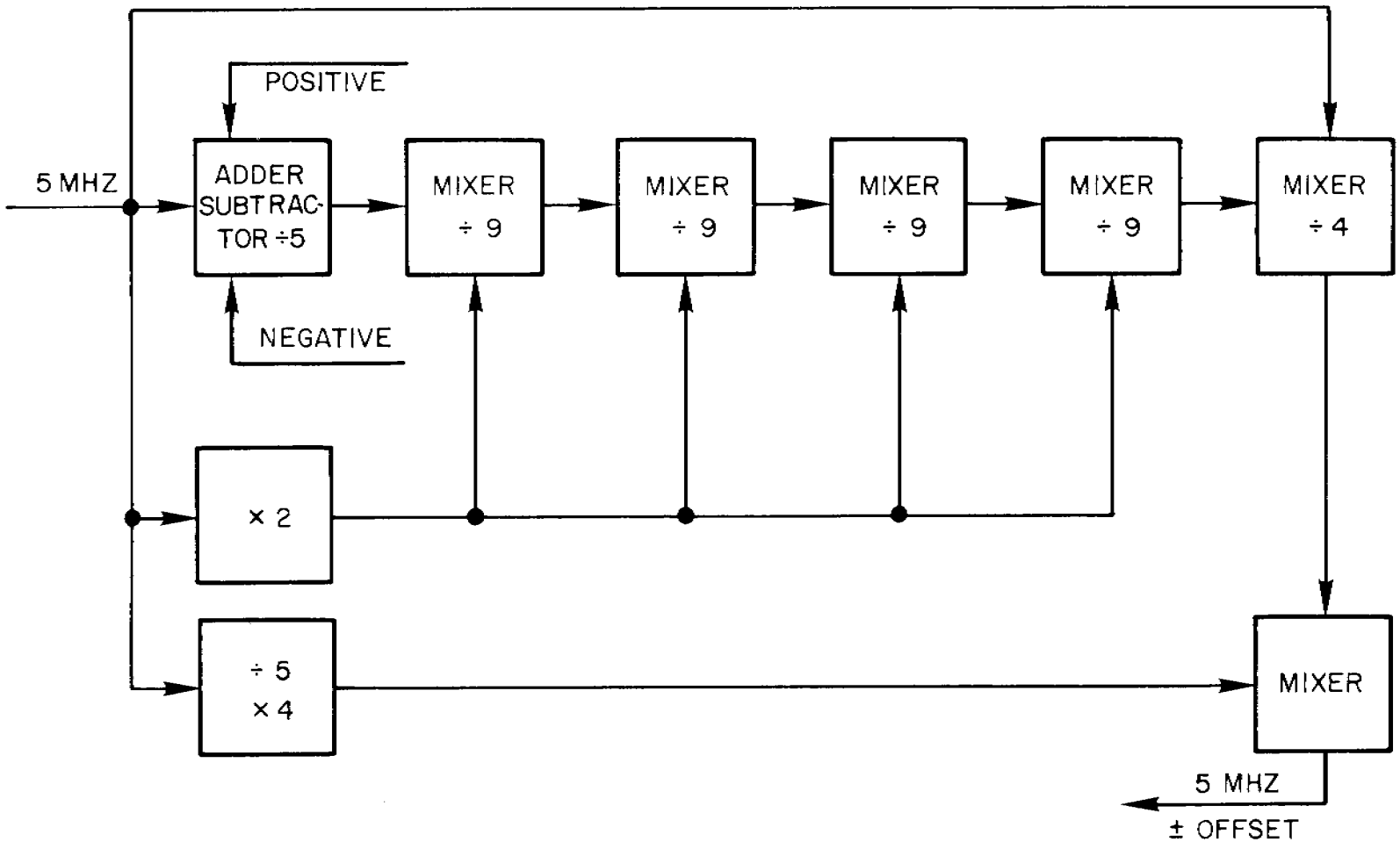

RELATIVISTIC SYNTHESIZER

Figure 14

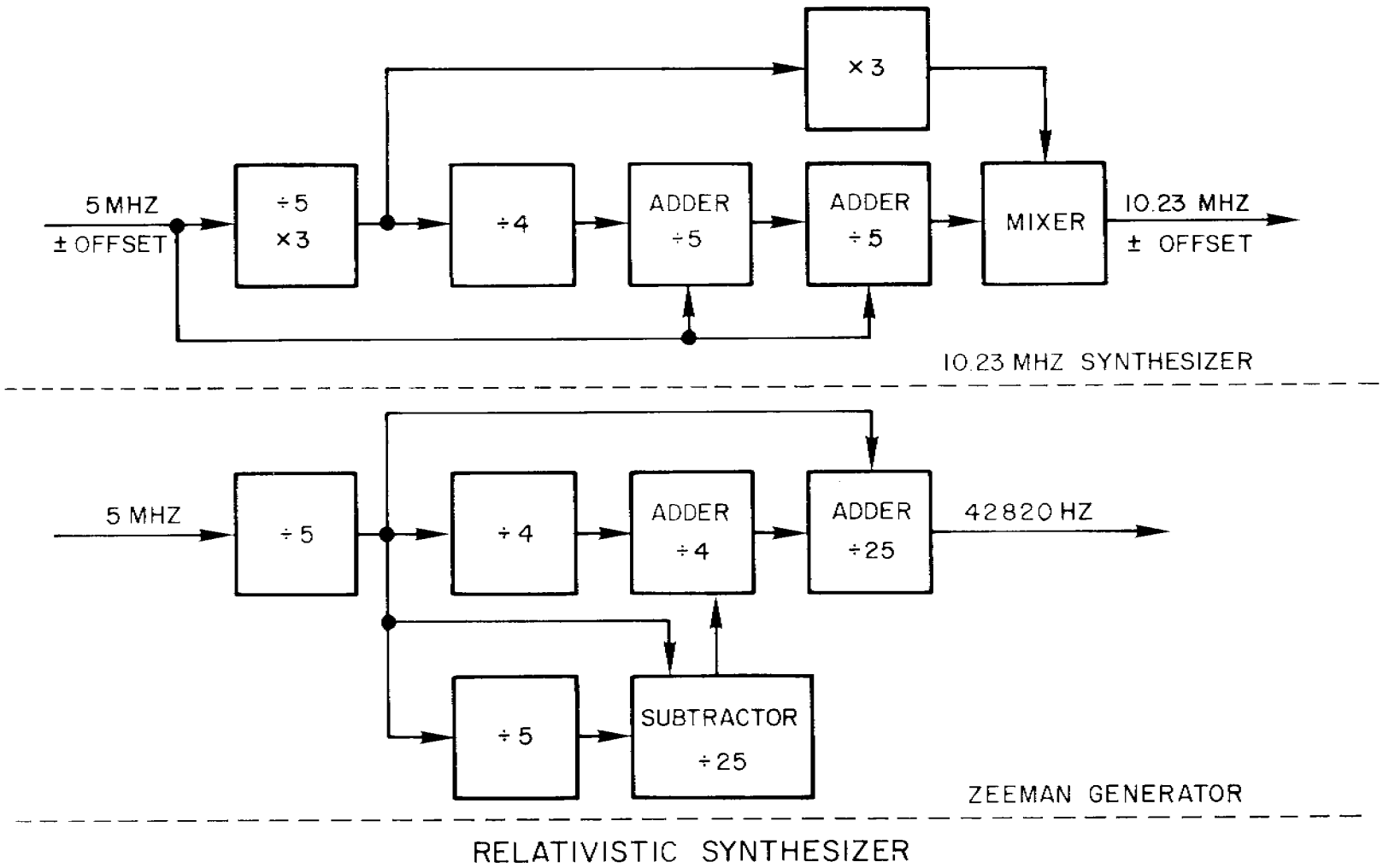
5 MHZ
± OFFSET
÷5
×3
÷4
ADDER
÷5
ADDER
÷5
×3
MIXER
10.23 MHZ
± OFFSET
10.23 MHZ SYNTHESIZER
5 MHZ
÷5
÷4
ADDER
÷4
ADDER
÷25
42820 HZ
÷5
SUBTRACTOR
÷25
ZEEMAN GENERATOR
RELATIVISTIC SYNTHESIZER

Figure 15

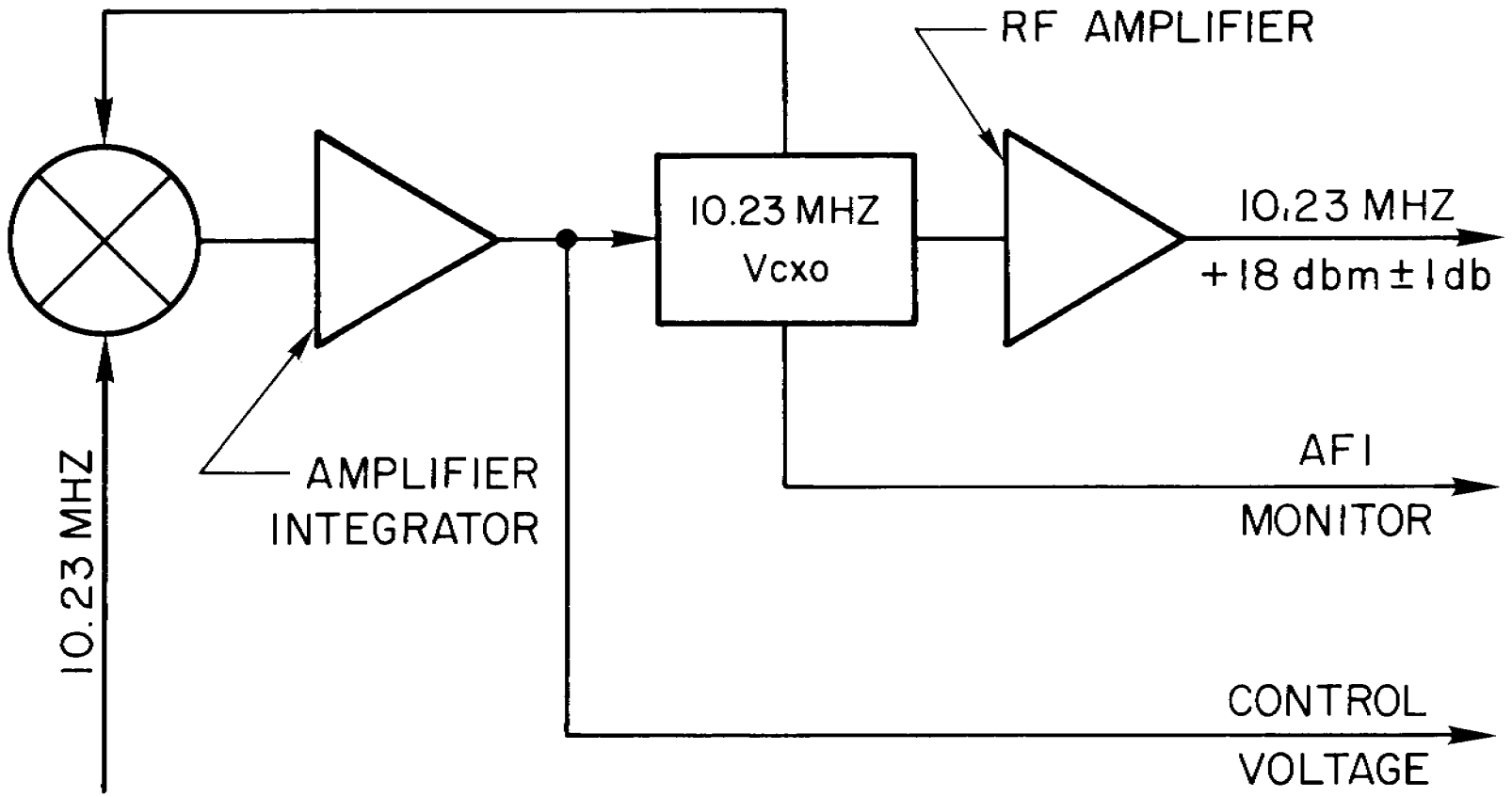

10.23 MHZ Vcxo

Figure 16