VLBI AND ITS CURRENT APPLICATIONS WITHIN THE SOLAR SYSTEM

Dr. John L. Fanselow
Jet Propulsion Laboratory
Pasadena, California 91103

ABSTRACT

This paper outlines the general theory of VLBI, and discusses its sensitivity as a measurement tool. Specific applications of the technique currently in use or in advanced planning stages will be summarized.

Independent station radio interferometry, more commonly known as VLBI (Very Long Baseline Interferometry) is a technique that was pioneered in 1967 by radio astronomers to study the structure of compact natural radio sources. Since then its applications have expanded to geodesy, spacecraft navigation, astrometry, and to time and frequency synchronization.

Figure 1 illustrates the underlying physical principles of interferometry. Two points, separated by a baseline $\vec{B}$, receive a signal from a very distant point source by way of the ray paths shown with the solid lines. In the particular case shown the signal received at R2 will be the same signal received at R1, but at a time interval, τ, later. Thus there is a constant phase difference, $\tau c/\lambda$, between the signals received at these two points.

Changing the angle between the baseline and the source by $\delta\theta = \frac{\lambda}{2B}$ causes the phase difference in the received signals at R1 and R2 to be altered by one half cycle. This angle increment is thus the interferometer angular resolution, which can be subarcsecond on rather modest baselines at typical microwave frequencies. (See the table in Fig. 1.) At transcontinental and intercontinental baselines this resolution becomes milliarcseconds or less (1 milliarcsecond subtends a distance of 750 meters at the sun as viewed from the earth). It is this excellent angular resolution which first attracted the radio astronomers in their quest to understand the small scale structure of radio sources.

Couple this sensitivity to small changes in angle with the passive, nearly all-weather capability of a microwave receiving system. You will then understand radio interferometry's potential for spacecraft navigation and for its use in the definition of a fundamental celestial

coordinate system, a coordinate system tied to the most distant objects in the known universe, the quasars. Further, add to this the experimental fact that the time delay, τ, can be measured with accuracies of 0.5-5 cm on most baselines, and you will appreciate that the technique has great potential for geodetic measurements. Geodetic measurements of a few centimeters, obtained with only a few hours of data, will provide a new era in the geometric measurement of the crustal deformations of the earth.

In this talk I want to limit myself to applications of VLBI within the Solar System. While the astrophysical applications are equally exciting, my time limit of one half hour permits me to cover only a portion of the field. However, before discussing the specific applications, I would like to outline the data acquisition, and reduction processes for VLBI.

Fig. 2 schematically shows the earth-fixed geometry of two antennas receiving the radio noise from a natural radio source at infinity. If the source is nearby, such as a spacecraft in the solar system, the curvature of the wave front must also be taken into account. For natural sources, the signal is usually white noise, while for artificial sources the signal is not usually purely random. (Spacecraft transmitting band-limited white noise, and natural radio sources, emitting spectral lines are important exceptions). Note also, that as the earth rotates "under" the source, the time delay between the arrival of the signal at station #1, and at #2 changes.

A typical data acquisition and processing flow is outlined in Figure 3. Each of the two stations receives the r.f. signal, digitizes and time tags it, and then records that data on magnetic tape. In this acquisition process independent frequency standards are used. For certain applications, standards with a $\Delta f/f \sim 5 \times 10^{-13}$ performance over hours are adequate. However, standards with a $\Delta f/f$ performance of $\sim 10^{-15}$ over nearly 24 hours are required for the most demanding of geodetic applications, i.e. measurements of intercontinental baselines with centimeter accuracy.

Variations on this acquisition process do exist. For example, one group does not digitize. Another group has also succeeded in transmitting the data back to a central correlation site by way of a wide band satellite link, thereby eliminating tapes.

By whatever means the data is brought to the central correlation site, at that site the two data streams are reconstructed such that the data transmission process is transparent. Since in the acquisition process the signal arrived at station #1 at an interval, τ, ahead of its arrival at station #2, it is necessary in the correlation process to delay the data stream from station #1 by some estimate, τ_m, of the actual

delay interval, τ. Otherwise, there would be no correlation between the bits.

In Figure 3 one can intuitively see that inserting a delay in the bit stream coming from the tape obtained at the left hand station, #1, is equivalent to moving that station along the incoming ray path until the signal received at that station is in time coincidence with the signal received at the other station. Since the correlator is free to vary this model delay, any unknown τ_g, can thus be determined. The best estimate of τ_g is that model delay, τ_m, which gives the maximum correlation between the signals received at the two stations.

One further complication, however, is that the actual delay, τ, is changing with time as the earth rotates. Thus, the correlation process must be driven by a computer capable of constantly updating the model for τ_m. Since we are often dealing with signals whose correlated power is 0.1 - 1% of the total received power, it is necessary to integrate for many million bits in order to develop an adequate signal to noise to detect the signal. Thus, the model for τ, must be sufficiently good such that the residual, $\tau_g - \tau_m$, is very nearly independent of time.

Once this is done, the output of the correlation is a time sequence of correlation sums, each sum being the sum of 10^6 - 10^7 single bit correlations. The time history of these correlation sums is the fundamental output of the interferometer, and up through this output all VLBI users have common data flow requirements.

Application dependent processing starts branching out at this point. However, for the applications I will review some sort of least squares estimation process is usually involved. In general, the apriori models of τ are not optimal. However, by estimation techniques applied over an ensemble of observations, both the geometric and hardware parameters in the model for τ can be refined from their apriori values. For example, relative station locations, and source positions may be improved. Clock differences, UT1, and Polar Motion are other parameters which are regularly refined from their apriori values.

Figure 4 presents the sensitivity of the derived VLBI observables τ, and $\dot{\tau}$ (more commonly $\nu\dot{\tau}$, or fringe frequency, where ν is the observing frequency), to two typical VLBI geometric parameters, an angle, and a baseline length. The second column refers to the time delay observable, τ. Typically it can be measured with an accuracy of better than 0.1 nsec (3 cm). The sensitivity of this observable to changes in angle is proportional to baseline length and has a maximum of 150 nsec/arcsec for a 10,000 km baseline. The sensitivity of observed time delay to changes in baseline length is 3.3 nsec/meter and is independent of baseline length.

With such sensitivities, and with the observable accuracy of 0.1 nsec it should not be surprising that VLBI has the potential accuracy for centimeter level geodesy and for milliarcsec level astrometry.

The time rate of change of time delay, while not quite so powerful in practice, does aid in the least squares parameter adjustments used for long baseline observations. Inclusion of that observable in the estimation processes decouples parameter correlations that would otherwise degrade the parameter estimates. Column 3 provides typical measurement accuracies and sensitivities on long baselines for the time derivative of delay (fringe frequency).

Despite the great promise of radio interferometry, I do not want to make obtaining this potential accuracy appear trivial. Calibrations of the receiving system, of the atmosphere, ionosphere, and space plasma are necessary along with a great deal of care in the data processing. The calibrations include simultaneous observations at S- and X-Band to remove the ionosphere and space plasma contributions, as well as water vapor radiometer measurements of the atmospheric water vapor along the line of sight to remove the differential delay contribution of the water vapor. Surface weather data, particularly atmospheric pressure, and receiver phase calibrations are also required.

However, these calibrations now appear feasible at the 0.5 - 2 cm level with current technology, meticulously applied. Actually, as some of the other speakers will discuss in more detail later, significant demonstrations of some aspects of this VLBI potential are already finished or are underway.

This concludes the outline of VLBI data acquisition, processing, and sensitivity. In the time remaining, I would like very briefly to outline the current and anticipated programs which apply radio interferometry within the Solar System. Table I provides such a summary for programs within the United States. Each entry in this table gives the program name, the institutions responsible for its implementation, the sponsoring agencies, the primary goal of the program, and the status. Other countries, such as Canada (one of the founders of the VLBI technique), Norway, and Australia have embryonic programs in these applications areas also. Since this table is self explanatory, I wish to finish my talk with a guided study of this table.

INTERFEROMETER ANGULAR RESOLUTION

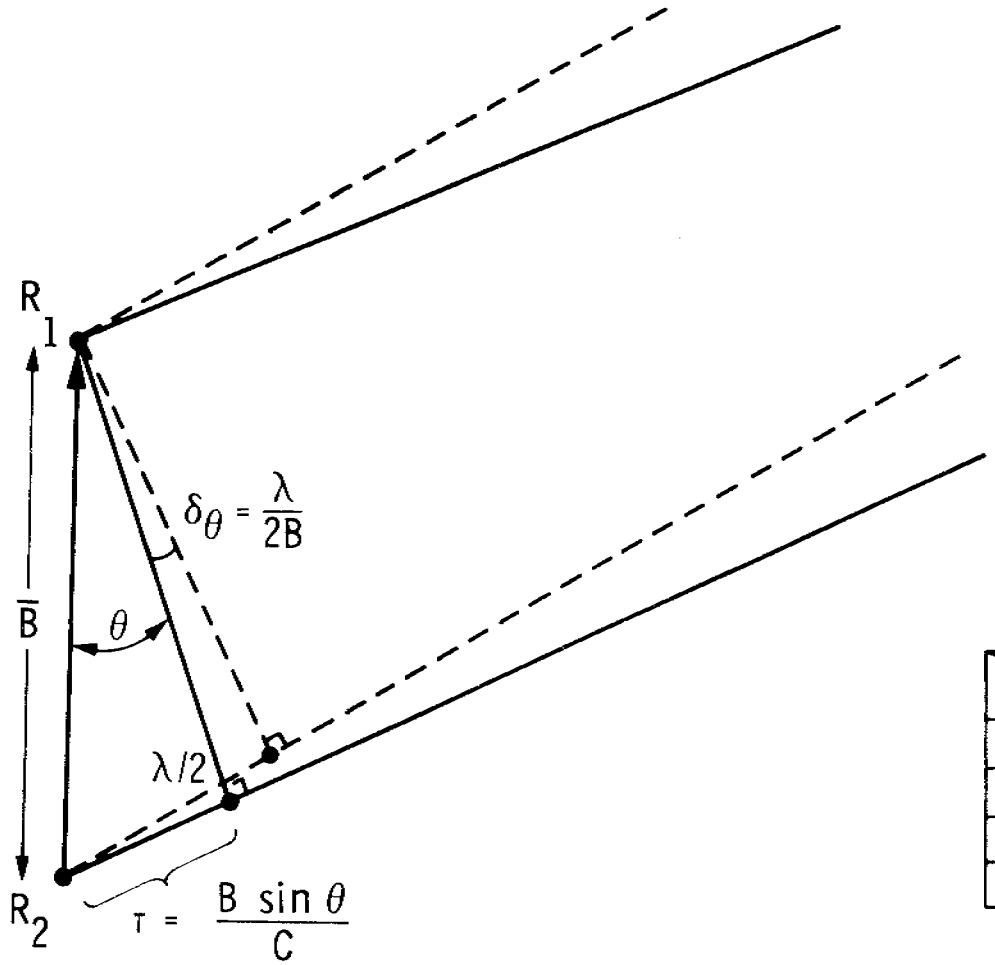

$\frac{\lambda}{2B}$ arc sec (1 arc sec $\simeq$ 5 μrad)

B (km) \ ν Hz	10^9	10^{10}
10	3	0.3
100	0.3	0.03
1000	0.03	0.003
10000	0.003	0.0003

FIGURE 1

GEOMETRY OF RADIO INTERFEROMETRY EXPERIMENTS

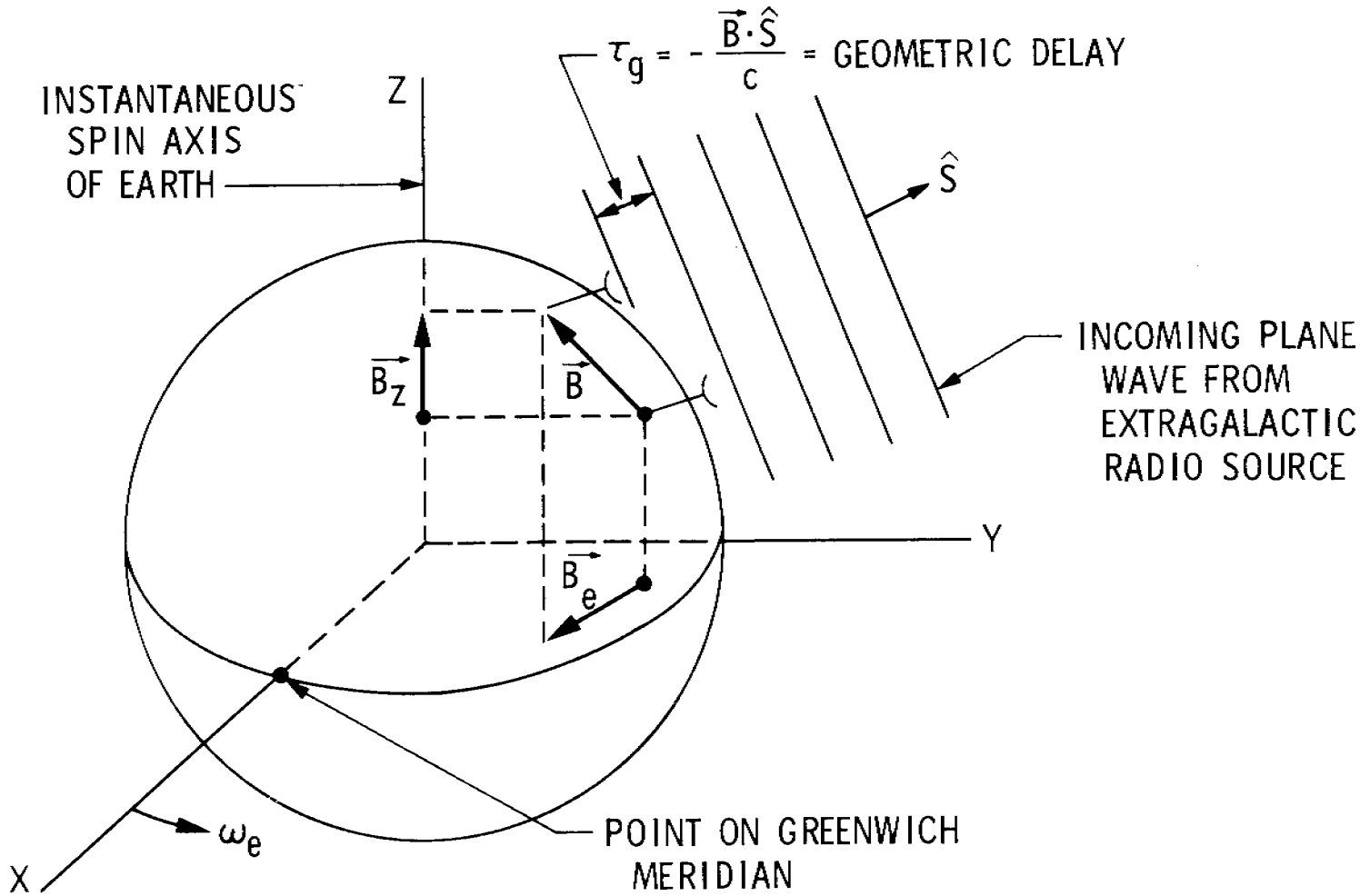

FIGURE 2

DATA ACQUISITION AND PROCESSING FLOW FOR VLBI

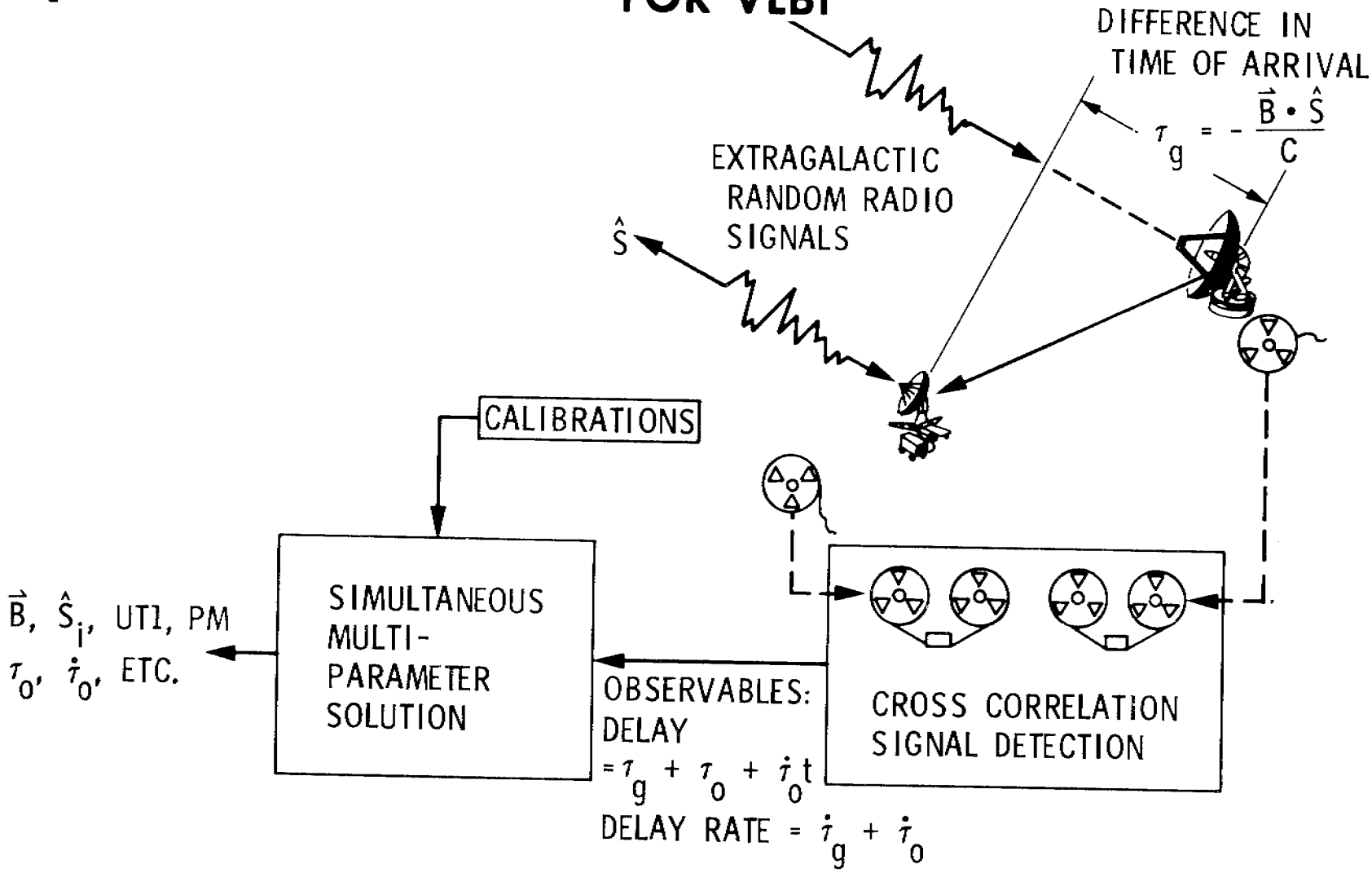

FIGURE 3

MAXIMUM SENSITIVITY OF VLBI FOR ANGULAR AND METRIC MEASUREMENTS ON 10000 km BASELINE

PARAMETER \ OBSERVABLE	DELAY (τ) ($\sigma \leqslant$ 0.1nsec)	FRINGE FREQUENCY ($\nu\dot{\tau}$) (X-BAND $\sigma \leqslant$ 1 mHz)
ANGLE	150 $\frac{\text{nsec}}{\text{arcsec}}$	98 $\frac{\text{mHz}}{\text{arcsec}}$
BASELINE	3.3 $\frac{\text{nsec}}{\text{meter}}$	2 $\frac{\text{mHz}}{\text{meter}}$

FIGURE 4

SPECIFIC APPLICATIONS OF VLBI

PROGRAM NAME	INSTITUTIONS (SPONSORS)	PRIMARY GOAL	COMPLETE√ OR DATE EXPECTED	SPECIFIC RESULTS
HAYSTACK/OVRO/ FAIRBANKS TRIANGLE	MIT/HO/GSFC (DOD-ARPA)	TECHNIQUE DEVELOPMENT FOR GEODESY	√	1-3 meter VECTOR CLOSURE OF BASELINES
QUASAR PATROL	GSFC/MIT/HO/ NRAO/JPL (NASA-OA NASA-OTDA NSF)	RADIO ASTRONOMY	√	a) CROSS COUNTRY BASELINE LENGTH REPEATABILITY ~20 cm
DSN VLBI DEVELOPMENT	JPL (NASA-OTDA)	TECHNIQUE DEVELOPMENT FOR SPACECRAFT NAVIGATION SUPPORT	√	a) 50 cm ACCURACY CALIFORNIA/SPAIN BASELINE b) UT1 ~2 msec
			7/79	DEVELOP SOURCE CATALOG AND OBTAIN STATION LOCATIONS FOR OPERATIONAL VLBI
			1980	DEMONSTRATE 5-10 cm VECTOR ACCURACY ON INTERCONTINENTAL BASELINES

FIGURE 5

SPECIFIC APPLICATIONS OF VLBI

PROGRAM NAME	INSTITUTIONS (SPONSORS)	PRIMARY GOAL	COMPLETE√ OR DATE EXPECTED	SPECIFIC RESULTS
ARIES (ASTRONOMICAL RADIO INTER-FEROMETRY EARTH SURVEYING)	JPL (NASA-OA)	PORTABLE ANTENNA TECHNIQUE DEVELOPMENT FOR GEODESY	√	a) 3 cm VECTOR REPEATABILITY ON 16 km BASELINE USING 64/26 meter STATIONS
			√	b) OCCUPIED 11 SITES IN 2 YEARS WITH 9 meter ANTENNA ~ 10 cm ACCURACY
			√	c) 3 cm VECTOR AGREEMENT WITH SURVEY ON 300 meter BASE-LINE
			√	d) 6 cm LENGTH AGREEMENT WITH NGS SURVEY ON 30 km BASELINE
			1978	e) 1-5 cm ACCURACY WITH 9 meter
			1978	f) 5-10 cm ACCURACY WITH 4 meter HIGH MOBILITY STATION
ALSEP ΔVLBI	JPL (NASA-OA)	LUNAR EPHEMERIS REFINEMENT	1978	TIE LUNAR EPHEMERIS TO RADIO SOURCE REFERENCE FRAME
PPME (PACIFIC PLATE MOTION EXPERIMENT)	GSFC/HO/MIT (NASA-OA)	GEODESY	√	a) HO/OVRO/NRAO 8 cm LENGTH REPEATABILITY
			√	b) POLAR MOTION CONSISTENT WITH SATELLITE DOPPLER MEASUREMENTS AT ~30 cm
			√	c) 20-50 cm VECTOR CLOSURE ON VARIOUS CONTINENTAL TRIANGLES
			√	d) 0.3 cm REPEATABILITY ON 1.2 km BASELINE
			√	e) STATION LOCATION MEASUREMENTS CONSISTENT WITH GEOCEIVERS AT 20-30 cm
			√	f) CLOCK SYNCH vs TRAVELING CLOCK COMPARISON AGREES WITHIN 10 nsec
			1978	g) DEVELOP 100 MBS DATA SYSTEM

FIGURE 6

SPECIFIC APPLICATIONS OF VLBI

PROGRAM NAME	INSTITUTIONS (SPONSORS)	PRIMARY GOAL	COMPLETE ✓ OR DATE EXPECTED	SPECIFIC RESULTS
VLBI VALIDATION	JPL/GSFC (NASA-OTDA NASA-OA)	TECHNIQUE VALIDATION	1980 1981	"VALIDATE" ACCURACY OF VLBI ON TRANSCONTINENTAL BASELINES AT 5 cm OR BETTER LEVEL COMPARE BASELINE MEASUREMENTS WITH COMPETING TECHNIQUES - LUNAR LASER, SATELLITE LASER
DSN OPERATIONAL VLBI	JPL (NASA-OTDA)	SUPPORT FOR SPACECRAFT NAVIGATION	7/79	OPERATIONAL INTERCONTINENTAL VLBI SYSTEM WITH WEEKLY OBSERVATIONS a) UT1/PM AT 50 cm LEVEL b) CLOCK SYNCH AT 10 nsec, FREQ SYNCH AT 10^{-13} c) 24 hour TURNAROUND
DSN ΔVLBI	JPL (NASA-OTDA)	TECHNIQUE DEVELOPMENT FOR SPACECRAFT NAVIGATION	1980	DEVELOP TECHNIQUE WHICH DIFFERENTIALLY MEASURES SPACECRAFT CELESTIAL POSITION RELATIVE TO FIXED NATURAL RADIO SOURCES (ACCURACY ~ 0".001). USE IN JOP MISSION

FIGURE 7

QUESTIONS AND ANSWERS

DR. TOM CLARK, NASA Goddard Space Flight Center:

Another group that has participated with Goddard, Haystack, MIT, et al, on an international front in many of our experiments, has been the group at Chalmers Institute of Technology at their observatory in Uppsala, Sweden. They have been very active in all of this and should have been included in the last list.

DR. FANSELOW:

Okay, fine.