NANOSECOND TIME TRANSFER VIA SHUTTLE LASER RANGING EXPERIMENT

Victor S. Reinhardt, Don A. Premo,
Michael W. Fitzmaurice, S. Clark Wardrip
NASA/Goddard Space Flight Center
Greenbelt, Maryland
and Peter O. Cervenka,
Phoenix Corp., McLean Virginia

ABSTRACT

A method is described to use a proposed shuttle laser ranging experiment to transfer time with nanosecond precision. All that need be added to the original experiment are low cost ground stations and an atomic clock on the shuttle. It is shown that global time transfer can be accomplished with 1 ns precision and transfer up to distances of 2000 km can be accomplished with better than 100 ps precision.

INTRODUCTION

The Shuttle Geodynamic Ranging System (SGRS) as presently conceived will employ laser ranging technology to achieve a one shot measurement precision of 10 centimeters standard deviation.[1,2] The instrument will contain a narrow pulse neodymium-YAG frequency doubled laser and an accurate pointing system to direct the 1/2 milliradian laser beam from Shuttle to each of a large number of reflective targets placed strategically throughout an area of interest on the surface of the earth. The instrument's primary function is precise measurement of baselines and relative heights between these targets where a typical maximum baseline distance is five hundred kilometers. The applications are varied but mainly rely on the ability of the system to perform its task with centimeter precision. For instance, measurement of baseline changes can yield information about tectonic plate motion and strain accumulation across faults. Similarly, intertarget vertical motion can be interpreted as dilatantcy (thought to be a precursor to earthquakes) or as subsidence due possibly to fluid extraction from or influx into subsurface regions. Figure 1 pictures SGRS in operation over the San Andreas fault in California.

SGRS does not measure baselines directly. Rather, it measures the range between itself and each retroreflector target by measuring the

time it takes laser pulses to traverse the distance between the spacecraft and the target and back. To measure baselines, a ranging sequence is used which minimizes the effects of spacecraft motion. Baselines are computed from the sequence of range measurements and the equations of motion of the spacecraft. Error analysis indicates that a ranging system having an accuracy of 10 centimeters for single measurements and operating in this mode can indeed yield centimeter precision with respect to intertarget measurements, assuming that several thousand range observations are obtained per target.

To see how the SGRS can be used for time transfer, one must look closely at the range system since the laser pulse is the only signal which is common to both the SGRS and the ground. Figure 2 shows a block diagram of the ranging subsystem as it is planned. The subsystem will use a frequency doubled neodymium-YAG Laser with a pulse width of about 12 ns which is fired at about a 10 pps rate. Observe that both the transmitted and reflected pulses will be measured through the same channel to avoid range biases. The real-time correlator and peak detector will operate in a fashion similar to a constant fraction discriminator to find the center of the pulse independent of returning pulse amplitude. This discriminator will have a dynamic range greater than 100:1 to compensate for atmospheric scintillation and other effects. Notice that an event clock will replace the usual "time of measurement" and "range time interval" units. This event clock will record the epoch of transmitted and reflected laser pulses with an accuracy of greater than 40 picoseconds. Thus, the range time interval to a target is the difference in epoch of the two pulses and the time of measurement is the average epoch of the two pulses. The time of measurement, which is also an estimate of the time of arrival of the laser pulse at the target, is sufficiently accurate for ranging purposes. When corrected for range rate effects, this time is also sufficiently accurate for time transfer purposes.

A range precision of 10 centimeters implies a range timing precision of 667 picoseconds and, if independence is assumed, a single pulse timing precision of 471 picoseconds. This number includes all effects of consequence within a time period comparable to the range time interval; i.e., up to 7 milliseconds. Because of the common channel, it is possible to compute the time of arrival of the laser pulses at the ground target with respect to the SGRS clock from a knowledge of the two event times and the range rate. The errors expected are those related to pulse timing and to non-common channel effects. Therefore, if the pulse timing precision on the ground is assumed to be the same as that of the SGRS, a total one shot timing precision at the ground target of 577 picoseconds should be expected.

Laser Time Transfer

To use SGRS for time transfer all one need add is a ground station capable of recording the epoch of laser pulses as they are reflected from the station. Such a station is depicted in Figure 3. The way these stations would be used to transfer time is shown in Figure 4. As the shuttle flies over two or more remote clock sites equipped with ground stations, it would range to them. Concurrently each ground station would record the epoch of laser pulses as they hit the station relative to its remote clock. The data on board the shuttle would allow the computation of the epoch of arrival of laser pulses on the ground relative to the on board frequency standard. By comparing all the data after the fact, one obtains a synchronization between each remote clock and the shuttle's on-board frequency standard. Therefore, one transfers time between two ground sites by using the shuttle frequency standard as a transfer standard.

For long range time transfers, one is limited by the transfer error of the on-board frequency standard. It can be shown that the transfer error of the on-board standard for times long compared with the pulse transit time is approximately the two sample Allan Variance for the transfer time. Figure 5 uses this to show the transfer error of several atomic frequency standards. Notice there are several standards which will maintain 1 ns for about 10^4 seconds, a little under three orbits. This time is sufficient to cover most pairs of sites. This will be discussed in further detail later in the paper.

For short range time transfer up to 2000 Km, one can use the moveable mirror on SGRS to sequentially hit several ground stations and thus eliminate the transfer error of the on-board frequency standard. This would allow one to average many measurements to reduce the one shot measurement error. How much this can be done is determined by the limits imposed by systematic errors or slowly varying time delays effecting the measurement. Fast results with ground based laser measurements and analysis of atmospheric effects indicate that the shuttle system will contribute less than 100 ps error.[1] The effects of the ground receiver on ultimate accuracy are discussed in the next section.

Laser Time Transfer Receiver

A block diagram of the Laser time transfer ground station is shown in Figure 5. The ground station has four basic elements: a retroreflector receiver, a constant fraction discriminator, and event clock, and a data logger. The retroreflector-receiver would consist of a cube corner array to reflect the laser pulses and a photomultiplier tube or a photodiode to detect the arrival of laser pulses

For the detector, relatively inexpensive photomultiplier tubes are available[3] with transit times of 10 to 30 ns, rise times of 1 to 3 ns, and for the pulse amplitudes of concern here, Jitter[4] of less than 100 ps. Errors caused by delay changes due to temperature or other variations occur principally through changes in power supply voltage. With a total power supply stability of 0.1%, variations in transit time are less than 20 ps. Any direct effects on the photomultiplier itself can be eliminated by shielding and temperature control of the tube, though this will probably not be necessary.

The constant fraction discriminator is necessary to compensate for received pulse amplitude variations caused by angular effects and scintillation. The discriminator would be set to trigger typically on the half amplitude point to minimize amplitude to time conversion effects. Constant fraction discriminators are available with a time walk of less than 120 ps over a 100:1 change in pulse amplitude.[5] This is more than sufficient to compensate for pulse amplitude variations to be seen by the time transfer receiver. Temperature coeficients are such to keep total time stability better than 120 ps. In any case, since constant fraction discriminators with sufficient accuracy can be built into a photomultiplier tube house, if necessary, one can remove temperature effects with a temperature controlled shroud around the photomultiplier assembly.

The event clock will run off 5 MHz and 1 pps supplied by the local clock. Interpolators which measure intervals of 100 ns to 500 ns in length to a resolution of 100 ps to 500 ps are available as standard CAMAC modules. This means that an event clock with only a 100 ns to 500 ns resolution would have to be constructed which could easily be accomplished with standard TTL logic. Of course care would have to be exercised in relating the 1 pps input to the interpolation measurement. This can be accomplished without too much difficulty providing the 1 pps input has a relatively fast rise time. If this is a problem, a scheme similar to that on the shuttle in which a laser diode at the receiver input is triggered by the 1 pps input can be used to record the epoch of the ground clock. Just as in the shuttle system, this would cancel most systematic delay effects in the time transfer ground station.

Since the pulses to be measured will occur only at a 10 pps rate for 30 seconds or so, the data logger need not be complicated. At these speeds a simple parallel printer can handle the data. Alternatively a calculator can be used to collect the data and store it on a tape cassette.

Shuttle Time Transfer Feasibility Study

For time transfer to be feasible via the shuttle laser ranging system

not only must the laser system be capable of time transfer, but the shuttle orbit must also allow time transfers between reasonable site locations. To determine whether the shuttle orbit would allow such reasonable time transfers, a study of shuttle passes over selected sites during a 12 day orbit was made. The sites are listed in Figure 7. The sites were selected for use in a validation experiment; they either had VLBI capability or had clocks available with nanosecond per day stabilities.

For this study, a twelve day 50° inclination orbit was used. A pass was defined as having at least a 20° inclination in the range vector between the shuttle and the site. For this study, the sites were given code numbers as listed in Figure 7. After a list of passes were complied and time ordered, the list was searched for pairs of passes at selected sites within time intervals from 60 seconds to 10^5 seconds. The results of these passes are shown in Figures 8 through 15. These charts contain the results of a computer search in which the computer went sequentially down the master list to define the first site of a pair and then counted the number of times the second site appeared within the specified period after the time of the first site pass. The results were summed as the computer went down the list sequentially for the first site. This method of counting yields very large numbers for long time intervals, but can be useful in combining weather data where multiple occurences of a second site increase the probability of obtaining a clear shot. In any case, the relative sizes of the numbers can be used in site selection. On each of the charts the first column and first row are the code numbers of the sites. Notice that pass pairs for the same site are included twice.

One can qualitatively understand the data by looking at Figure 17 which shows a one day shuttle orbit superimposed over the sites. Of course the extreme latitude of Onsala makes it a poor candidate for a site as verified by the data. However, because the 20° inclination allows the shuttle to hit anything within $\pm$1000 Km of the orbit position, even Onsala has passes during the twelve day period. Since the orbit is non-repeating over the earth, any two sites within $\pm$50° latitude will be connected. The data shows that within 10^4 seconds most of the sites are connected and within 3×10^4 seconds all of the sites are connected. For short time intervals sites close together were of course connected. As can be verified by the data, sites along orbit paths are favorable for short term transfers even when separated by large distances. An especially favorable site is Westford since it sits on many orbit paths in common with other sites.

References

[1]T.E. McGunigal, et. al. "Satellite Laser Ranging Work at the Goddard Space Flight Center", NASA Doc. #X-723-75-172 (July, 1975).

[2]F. O. Vonbun, et. al "Spaceborne Earth Applications Ranging System (SPEAR)", Journal of Spacecraft and Rockets, Vol 14, No. 8, pp 492-495 (August, 1977).

[3]The data quoted is based on an RCA Model 4836 Photomultiplier Tube.

[4]Jitter measurements courtesy of Jim Abshire, Goddard Space Flight Center (Private Communication).

[5]Ortec Model 270/271 Constant Fraction Discriminator.

Figures

1. Shuttle Geodynamic Ranging System

2. SGRS Ranging Subsystem

3. Laser Time Transfer Receiver

4. Shuttle Laser Time Transfer

5. On Board Clock Transfer Error

6. Time Transfer Ground Station

7. Laser Time Transfer Feasibility Study Locations

8. Number of pass pairs within 6.0 E+01 seconds

9. Number of pass pairs within 1.2 E+02 seconds

10. Number of pass pairs within 3.0 E+02 seconds

11. Number of pass pairs within 1.0E+03 seconds

12. Number of pass pairs within 3.0E+03 seconds

13. Number of pass pairs within 1.0E+04 seconds

14. Number of pass pairs within 3.0E+04 seconds

15. Number of pass pairs within 1.0E+05 seconds

16. Typical Shuttle One Day Orbit

RETROREFLECTOR TARGET -
SPACEBORNE LASER RANGING
SAN ANDREAS FAULT

SPACEBORNE LASER RANGING SYSTEM

RANGING SUBSYSTEM

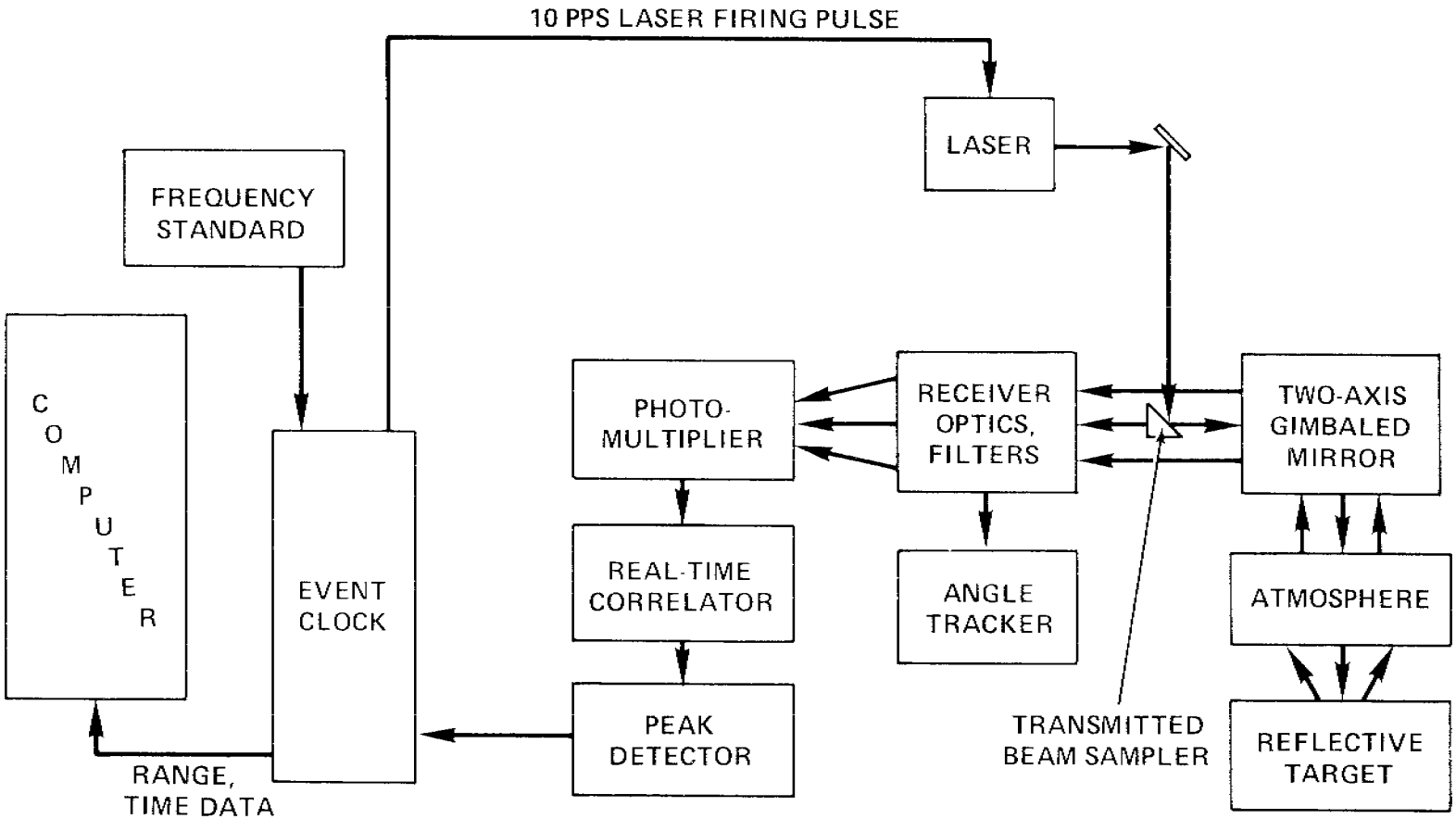

LASER TIME TRANSFER RECEIVER

CROSS SECTION≈17×10^6 M^2
WITHIN $\pm 16^0$ OF AXIS

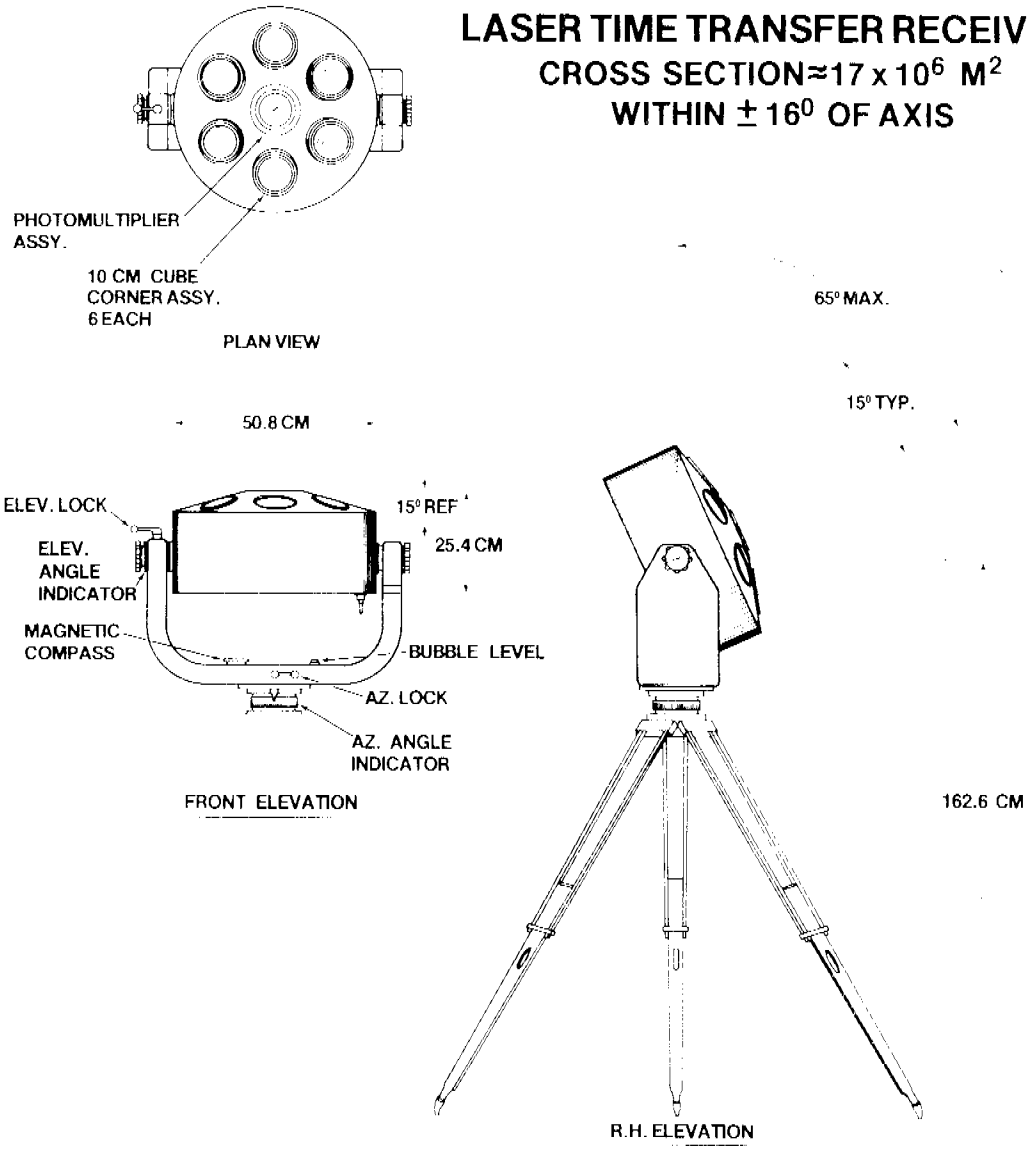

SHUTTLE LASER TIME TRANSFER

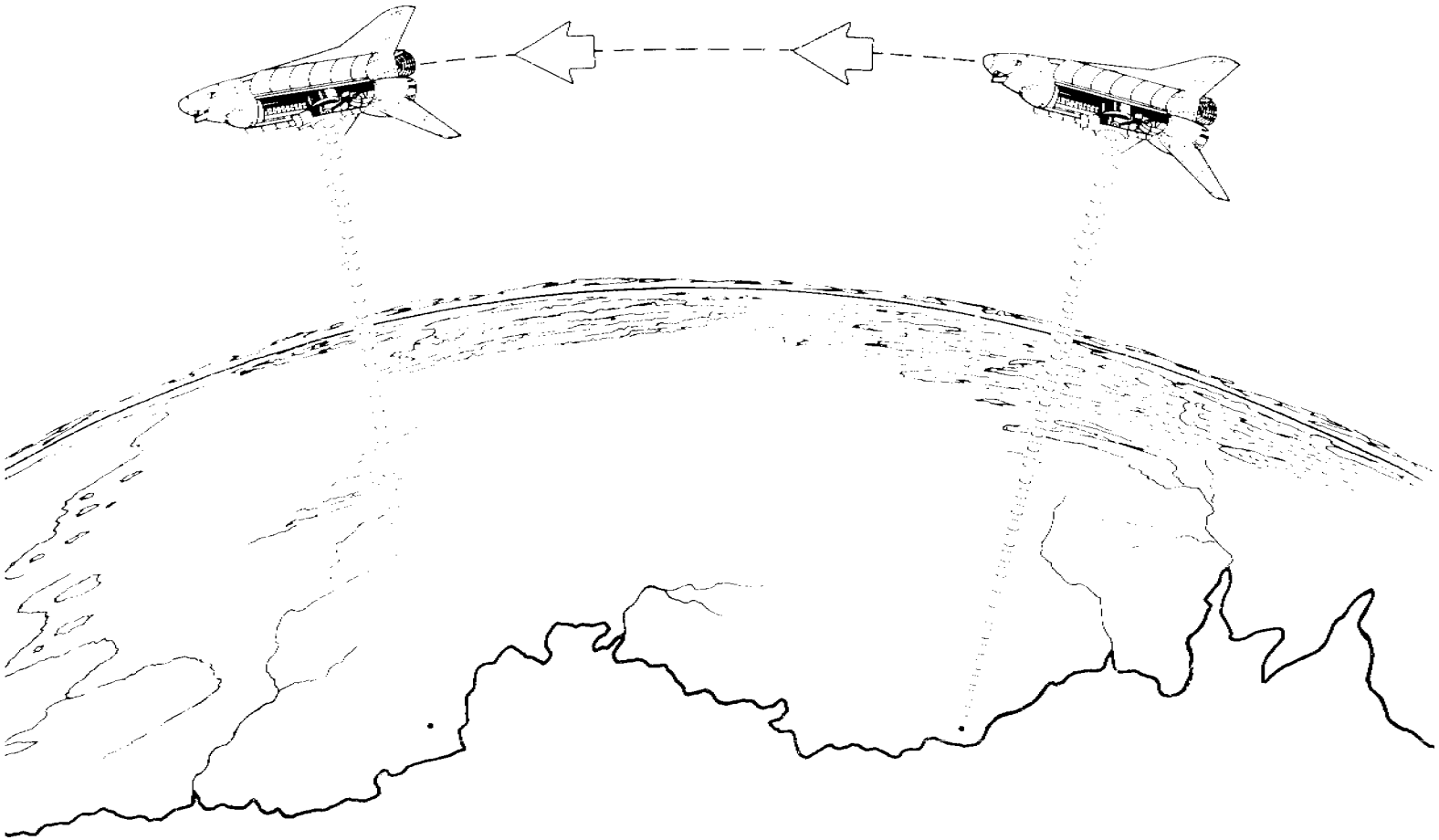

ON BOARD CLOCK TRANSFER ERROR

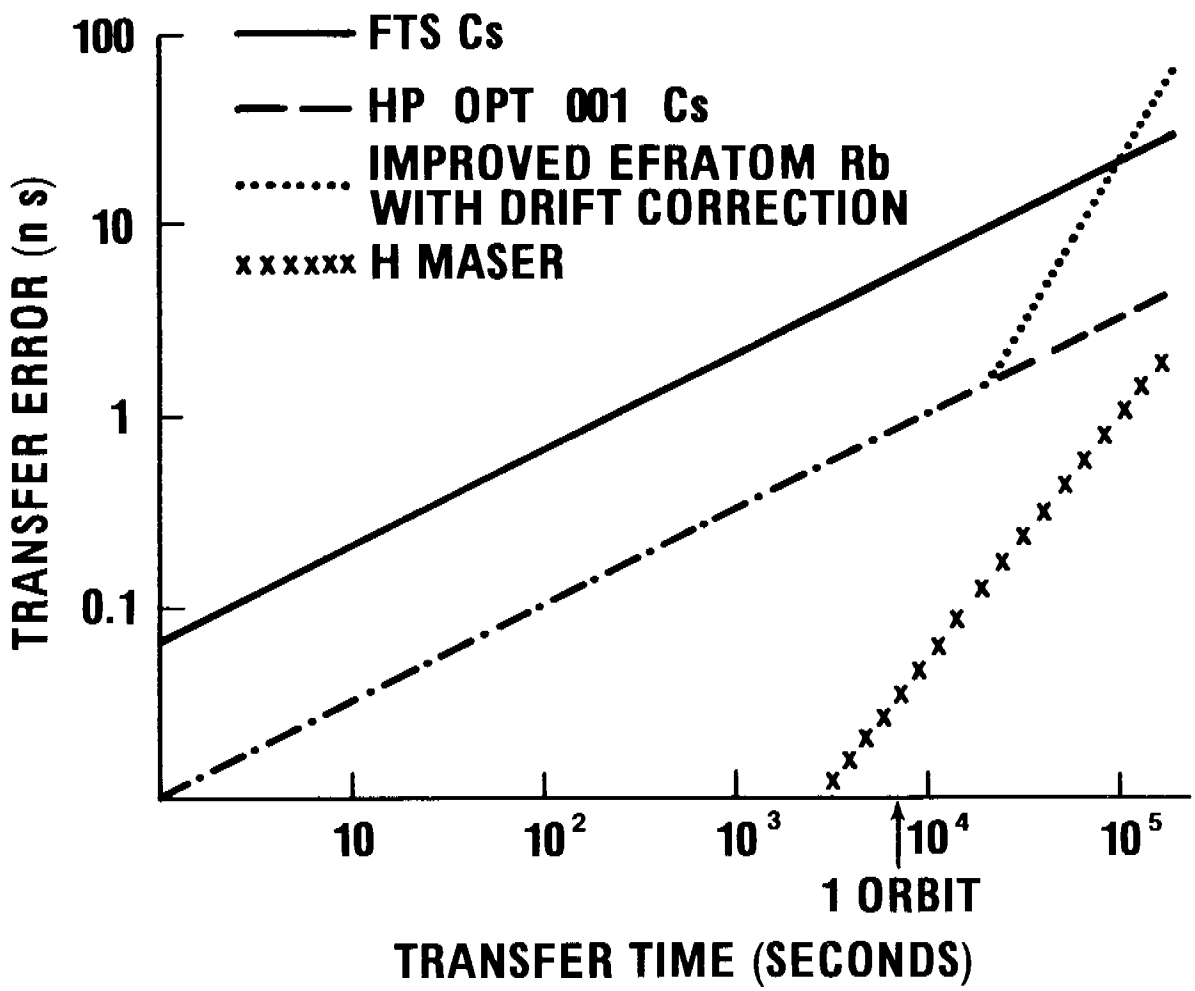

TIME TRANSFER GROUND SYSTEM

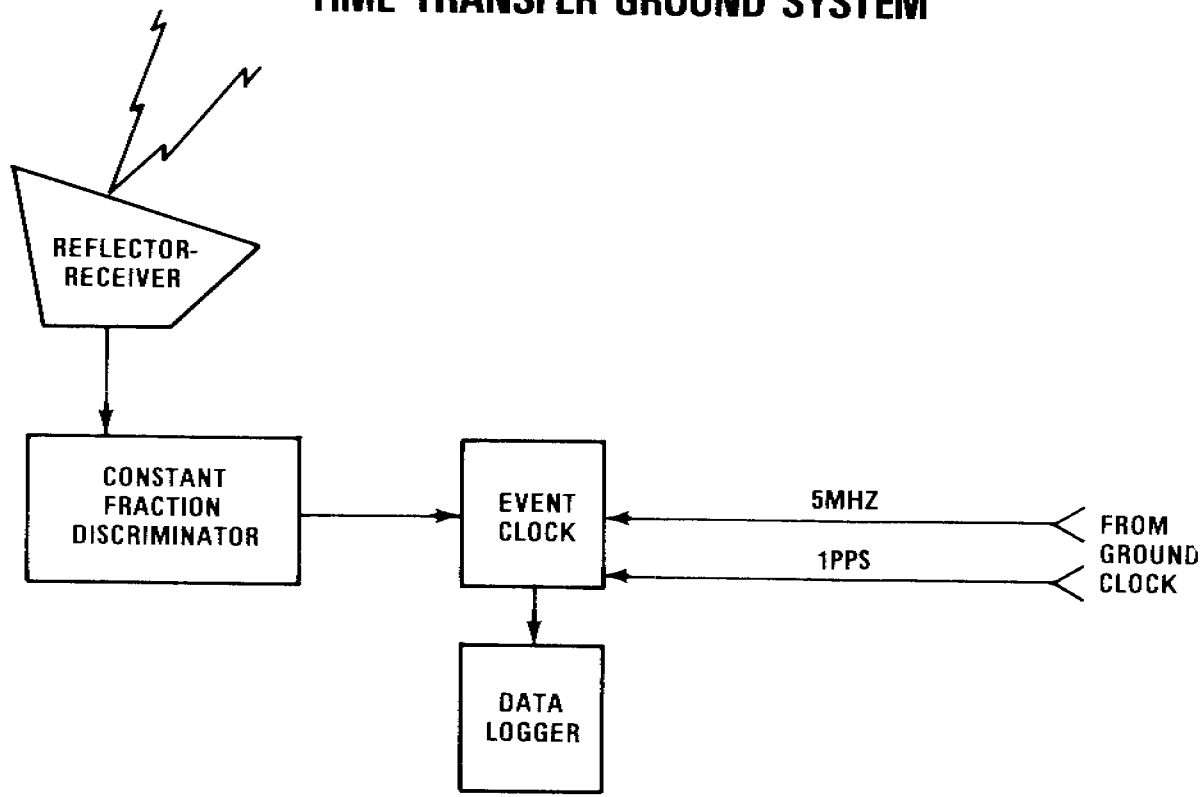

LASER TIME TRANSFER
FEASIBILITY STUDY LOCATIONS

NAME	LOCATION	LONGITUDE	LATITUDE	LOC. NO.
GREENBANK	WEST VIRGINIA	W79 50.2	N38 26 17	1
RGO	ENGLAND	W0 20.3	N50 52 18	2
MADRID	SPAIN	W3 41.3	N40 24 30.0	3
OTTAWA	ONTARIO	W75 53.6	N45 23 13	4
PARKES	AUSTRALIA	E148 15.7	S33 00 0.04	5
RIVERSIDE	MARYLAND	W77 14.0	N38 22 26.1	6
TOKYO	JAPAN	E139 32.4	N35 40 18.2	7
WESTFORD	MASSACHUSETTS	W71 29.5	N42 37 2.4	8
OWENS VALLEY	CALIFORNIA	W118 17.6	N37 13 53.8	9
BOCHUM	GERMANY	E7 11.5	N51 25 43	10
BOULDER	COLORADO	W105 7.4	N40 5 28	11
FORT DAVIS	TEXAS	W103 57	N30 38 00	12
GOLDSTONE	CALIFORNIA	W116 50.9	N35 23 34.2	13
ONSALA	SWEDEN	E11 55.2	N57 23 36.1	14
LAKE TRAVERSE	ONTARIO	W78 4.4	N45 57 19.4	15
PARIS	FRANCE	E2 20.2	N48 50 11	16
USNO	WASHINGTON, D.C.	W77 3.9	N38 55 14.0	17
GREENBELT	MARYLAND	W76 49.6	N39 1 11.48	18

NUMBER OF PASS PAIRS WITHIN 6.0E+01 SECONDS

	1	2	3	4	5	6	7	8	9	10	11	12	13	14	15	16	17	18
1	0	0	0	21	0	33	0	10	0	0	0	0	0	0	24	0	34	33
2	0	0	9	0	0	0	0	0	0	33	0	0	0	0	0	38	0	0
3	0	9	0	0	0	0	0	0	0	4	0	0	0	0	0	10	0	0
4	21	0	0	0	0	26	0	51	0	0	0	0	0	0	51	0	29	29
5	0	0	0	0	0	0	0	0	0	0	0	0	0	0	0	0	0	0
6	33	0	0	26	0	0	0	18	0	0	0	0	0	0	19	0	37	36
7	0	0	0	0	0	0	0	0	0	0	0	0	0	0	0	0	0	0
8	10	0	0	51	0	18	0	0	0	0	0	0	0	0	29	0	20	22
9	0	0	0	0	0	0	0	0	0	0	4	2	31	0	0	0	0	0
10	0	33	4	0	0	0	0	0	0	0	0	0	0	13	0	40	0	0
11	0	0	0	0	0	0	0	0	4	0	0	6	7	0	0	0	0	0
12	0	0	0	0	0	0	0	0	2	0	6	0	0	0	0	0	0	0
13	0	0	0	0	0	0	0	0	31	0	7	0	0	0	0	0	0	0
14	0	0	0	0	0	0	0	0	0	13	0	0	0	0	0	0	0	0
15	24	0	0	51	0	19	0	29	0	0	0	0	0	0	0	0	21	21
16	0	38	10	0	0	0	0	0	0	40	0	0	0	0	0	0	0	0
17	34	0	0	29	0	37	0	20	0	0	0	0	0	0	21	0	0	38
18	33	0	0	29	0	36	0	22	0	0	0	0	0	0	21	0	38	0

NUMBER OF PASS PAIRS WITHIN 1.2E+02 SECONDS

	1	2	3	4	5	6	7	8	9	10	11	12	13	14	15	16	17	18
1	0	0	0	26	0	33	0	27	0	0	0	0	0	0	24	0	34	33
2	0	0	17	0	0	0	0	0	0	34	0	0	0	12	0	38	0	0
3	0	17	0	0	0	0	0	0	0	4	0	0	0	0	0	19	0	0
4	26	0	0	0	0	27	0	53	0	0	0	0	0	0	51	0	29	29
5	0	0	0	0	0	0	0	0	0	0	0	0	0	0	0	0	0	0
6	33	0	0	27	0	0	0	31	0	0	0	0	0	0	25	0	37	36
7	0	0	0	0	0	0	0	0	0	0	0	0	0	0	0	0	0	0
8	27	0	0	53	0	31	0	0	0	0	0	0	0	0	51	0	33	33
9	0	0	0	0	0	0	0	0	0	0	16	3	31	0	0	0	0	0
10	0	34	4	0	0	0	0	0	0	0	0	0	0	13	0	40	0	0
11	0	0	0	0	0	0	0	0	16	0	0	16	10	0	0	0	0	0
12	0	0	0	0	0	0	0	0	3	0	16	0	5	0	0	0	0	0
13	0	0	0	0	0	0	0	0	31	0	10	5	0	0	0	0	0	0
14	0	12	0	0	0	0	0	0	0	13	0	0	0	0	0	13	0	0
15	24	0	0	51	0	25	0	51	0	0	0	0	0	0	0	0	27	27
16	0	38	19	0	0	0	0	0	0	40	0	0	0	13	0	0	0	0
17	34	0	0	29	0	37	0	33	0	0	0	0	0	0	27	0	0	38
18	33	0	0	29	0	36	0	33	0	0	0	0	0	0	27	0	38	0

NUMBER OF PASS PAIRS WITHIN 3.0E+02 SECONDS

	1	2	3	4	5	6	7	8	9	10	11	12	13	14	15	16	17	18
1	0	0	0	26	0	33	0	28	0	0	11	3	0	0	24	0	34	33
2	0	0	19	0	0	0	0	0	0	34	0	0	0	12	0	38	0	0
3	0	19	0	0	0	0	0	0	0	19	0	0	0	4	0	25	0	0
4	26	0	0	0	0	27	0	53	0	0	2	0	0	0	51	0	29	29
5	0	0	0	0	0	0	0	0	0	0	0	0	0	0	0	0	0	0
6	33	0	0	27	0	0	0	31	0	0	8	1	0	0	25	0	37	36
7	0	0	0	0	0	0	0	0	0	0	0	0	0	0	0	0	0	0
8	28	0	0	53	0	31	0	0	0	0	0	0	0	0	51	0	33	33
9	0	0	0	0	0	0	0	0	0	0	25	17	31	0	0	0	0	0
10	0	34	19	0	0	0	0	0	0	0	0	0	0	13	0	40	0	0
11	11	0	0	2	0	8	0	0	25	0	0	16	24	0	13	0	9	8
12	3	0	0	0	0	1	0	0	17	0	16	0	17	0	0	0	0	0
13	0	0	0	0	0	0	0	0	31	0	24	17	0	0	0	0	0	0
14	0	12	4	0	0	0	0	0	0	13	0	0	0	0	0	13	0	0
15	24	0	0	51	0	25	0	51	0	0	13	0	0	0	0	0	27	27
16	0	38	25	0	0	0	0	0	0	40	0	0	0	13	0	0	0	0
17	34	0	0	29	0	37	0	33	0	0	9	0	0	0	27	0	0	38
18	33	0	0	29	0	36	0	33	0	0	8	0	0	0	27	0	38	0

NUMBER OF PASS PAIRS WITHIN 1.0E+03 SECONDS

	1	2	3	4	5	6	7	8	9	10	11	12	13	14	15	16	17	18
1	0	10	15	26	0	33	0	28	0	6	11	10	1	0	24	12	34	33
2	10	0	19	8	0	12	0	12	0	34	0	0	0	12	6	38	12	12
3	15	19	0	20	0	14	0	20	0	19	0	0	0	4	18	25	15	15
4	26	8	20	0	0	27	0	53	18	4	21	14	17	0	51	10	29	29
5	0	0	0	0	0	0	0	0	0	0	0	0	0	0	0	0	0	0
6	33	12	14	27	0	0	0	31	0	8	9	9	0	0	25	14	37	36
7	0	0	0	0	0	0	0	0	0	0	0	0	0	0	0	0	0	0
8	28	12	20	53	0	31	0	0	18	8	21	14	17	0	51	14	33	33
9	0	0	0	18	0	0	0	18	0	0	25	17	31	0	18	0	0	0
10	6	34	19	4	0	8	0	8	0	0	0	0	0	13	2	40	8	8
11	11	0	0	21	0	9	0	21	25	0	0	16	24	0	21	0	10	9
12	10	0	0	14	0	9	0	14	17	0	16	0	17	0	14	0	10	10
13	1	0	0	17	0	0	0	17	31	0	24	17	0	0	17	0	1	1
14	0	12	4	0	0	0	0	0	0	13	0	0	0	0	0	13	0	0
15	24	6	18	51	0	25	0	51	18	2	21	14	17	0	0	8	27	27
16	12	38	25	10	0	14	0	14	0	40	0	0	0	13	8	0	14	14
17	34	12	15	29	0	37	0	33	0	8	10	10	1	0	27	14	0	38
18	33	12	15	29	0	36	0	33	0	8	9	10	1	0	27	14	38	0

NUMBER OF PASS PAIRS WITHIN 3.0E+03 SECONDS

	1	2	3	4	5	6	7	8	9	10	11	12	13	14	15	16	17	18
1	0	10	15	26	3	33	0	28	0	6	11	10	1	0	24	12	34	33
2	10	0	19	8	11	12	0	12	0	35	0	3	0	12	6	39	12	12
3	15	19	0	20	16	14	0	20	4	19	8	14	6	4	18	25	15	15
4	26	8	20	0	15	27	0	53	18	4	21	14	17	0	51	10	29	29
5	3	11	16	15	0	5	0	15	4	14	2	0	1	3	15	14	6	6
6	33	12	14	27	5	0	0	31	0	8	9	9	0	0	25	14	37	36
7	0	0	0	0	0	0	0	0	13	0	4	9	14	0	0	0	0	0
8	28	12	20	53	15	31	0	0	18	8	21	14	17	0	51	14	33	33
9	0	0	4	18	4	0	13	18	0	0	25	17	31	0	18	0	0	0
10	6	35	19	4	14	8	0	8	0	0	0	0	0	13	2	40	8	8
11	11	0	8	21	2	9	4	21	25	0	0	16	24	0	21	0	10	9
12	10	3	14	14	0	9	9	14	17	0	16	0	17	0	14	5	10	10
13	1	0	6	17	1	0	14	17	31	0	24	17	0	0	17	0	1	1
14	0	12	4	0	3	0	0	0	0	13	0	0	0	0	0	13	0	0
15	24	6	18	51	15	25	0	51	18	2	21	14	17	0	0	8	27	27
16	12	39	25	10	14	14	0	14	0	40	0	5	0	13	8	0	14	14
17	34	12	15	29	6	37	0	33	0	8	10	10	1	0	27	14	0	38
18	33	12	15	29	6	36	0	33	0	8	9	10	1	0	27	14	38	0

NUMBER OF PASS PAIRS WITHIN 1.0E+04 SECONDS

	1	2	3	4	5	6	7	8	9	10	11	12	13	14	15	16	17	18
1	11	27	28	64	31	57	19	70	24	23	45	28	22	2	60	29	60	58
2	27	27	57	28	39	30	0	36	4	89	8	17	6	33	24	99	31	31
3	28	57	15	48	41	28	16	52	20	57	28	24	23	17	44	67	30	30
4	64	28	48	41	58	67	9	139	56	20	73	37	51	0	131	32	73	72
5	31	39	41	58	5	34	0	62	24	44	30	14	21	15	56	48	36	36
6	57	30	28	67	34	13	18	75	24	26	45	28	21	4	63	34	65	63
7	19	0	16	9	0	18	8	9	22	0	19	18	22	0	0	0	18	16
8	70	36	52	139	62	75	9	45	56	28	73	41	51	4	135	42	81	80
9	24	4	20	56	24	24	22	56	11	0	54	37	51	0	56	6	26	25
10	23	89	57	20	44	26	0	28	0	28	4	11	2	38	16	102	27	27
11	45	8	28	73	30	45	19	73	54	4	16	41	52	0	71	10	48	46
12	28	17	24	37	14	28	18	41	37	11	41	3	37	0	35	19	29	28
13	22	6	23	51	21	21	22	51	51	2	52	37	9	0	51	8	24	23
14	2	33	17	0	15	4	0	4	0	38	0	0	0	1	0	38	4	4
15	60	24	44	131	56	63	0	135	56	16	71	35	51	0	39	28	69	68
16	29	99	67	32	48	34	0	42	6	102	10	19	8	38	28	34	35	35
17	60	31	30	73	36	65	18	81	26	27	48	29	24	4	69	35	15	67
18	58	31	30	72	36	63	16	80	25	27	46	28	23	4	68	35	67	14

NUMBER OF PASS PAIRS WITHIN 3.0E+04 SECONDS

	1	2	3	4	5	6	7	8	9	10	11	12	13	14	15	16	17	18
1	36	88	85	153	65	110	47	167	88	86	110	71	82	25	147	102	115	111
2	88	46	126	158	90	96	51	170	66	128	85	52	59	42	152	150	101	100
3	85	126	45	146	81	90	47	158	77	132	96	63	73	42	138	150	96	95
4	153	158	146	92	109	161	67	253	145	157	171	115	136	51	227	182	171	167
5	65	90	81	109	22	69	38	118	66	88	74	50	62	31	103	103	72	71
6	110	96	90	161	69	41	49	176	96	91	116	74	86	28	155	111	123	119
7	47	51	47	67	38	49	30	73	66	52	65	50	63	17	65	60	51	48
8	167	170	158	253	118	176	73	108	151	169	179	119	140	56	243	196	186	181
9	88	66	77	145	66	96	66	151	38	59	119	79	103	19	143	77	101	99
10	86	128	132	157	88	91	52	169	59	48	79	47	57	43	149	154	98	97
11	110	85	96	171	74	116	65	179	119	79	46	89	111	21	166	101	122	119
12	71	52	63	115	50	74	50	119	79	47	89	18	74	15	113	61	79	77
13	82	59	73	136	62	86	63	140	103	57	111	74	32	18	134	71	92	90
14	25	42	42	51	31	28	17	56	19	43	21	15	18	1	49	49	30	30
15	147	152	138	227	103	155	65	243	143	149	166	113	134	49	84	174	165	161
16	102	150	150	182	103	111	60	196	77	154	101	61	71	49	174	66	118	117
17	115	101	96	171	72	123	51	186	101	98	122	79	92	30	165	118	45	125
18	111	100	95	167	71	119	48	181	99	97	119	77	90	30	161	117	125	42

NUMBER OF PASS PAIRS WITHIN 1.0E+05 SECONDS

	1	2	3	4	5	6	7	8	9	10	11	12	13	14	15	16	17	18
1	106	275	272	381	213	256	205	408	248	272	281	189	235	92	368	314	268	260
2	275	157	320	408	236	290	219	445	249	357	283	205	239	121	388	408	302	295
3	272	320	132	415	234	289	220	451	246	328	275	196	235	108	395	373	303	297
4	381	408	415	278	315	401	287	648	376	406	431	279	355	130	586	476	421	411
5	213	236	234	315	69	224	157	338	186	235	217	148	176	74	301	275	234	228
6	256	290	289	401	224	117	218	428	261	287	294	197	245	94	385	335	282	274
7	205	219	220	287	157	218	90	311	206	223	223	157	193	75	278	257	225	218
8	408	445	451	648	338	428	311	317	400	442	455	300	377	142	623	518	449	438
9	248	249	246	376	186	261	206	400	106	252	280	191	238	76	362	295	275	268
10	272	357	328	406	235	287	223	442	252	161	282	207	241	123	386	412	300	294
11	281	283	275	431	217	294	223	455	280	282	136	213	266	89	416	330	309	301
12	189	205	196	279	148	197	157	300	191	207	213	60	183	70	268	239	207	201
13	235	239	235	355	176	245	193	377	238	241	266	183	97	75	342	282	259	252
14	92	121	108	130	74	94	75	142	76	123	89	70	75	14	124	139	99	97
15	368	388	395	586	301	385	278	623	362	386	416	268	342	124	257	453	405	395
16	314	408	373	476	275	335	257	518	295	412	330	239	282	139	453	213	350	343
17	268	302	303	421	234	282	225	449	275	300	309	207	259	99	405	350	128	287
18	260	295	297	411	228	274	218	438	268	294	301	201	252	97	395	343	287	121

TYPICAL SHUTTLE ONE DAY ORBIT

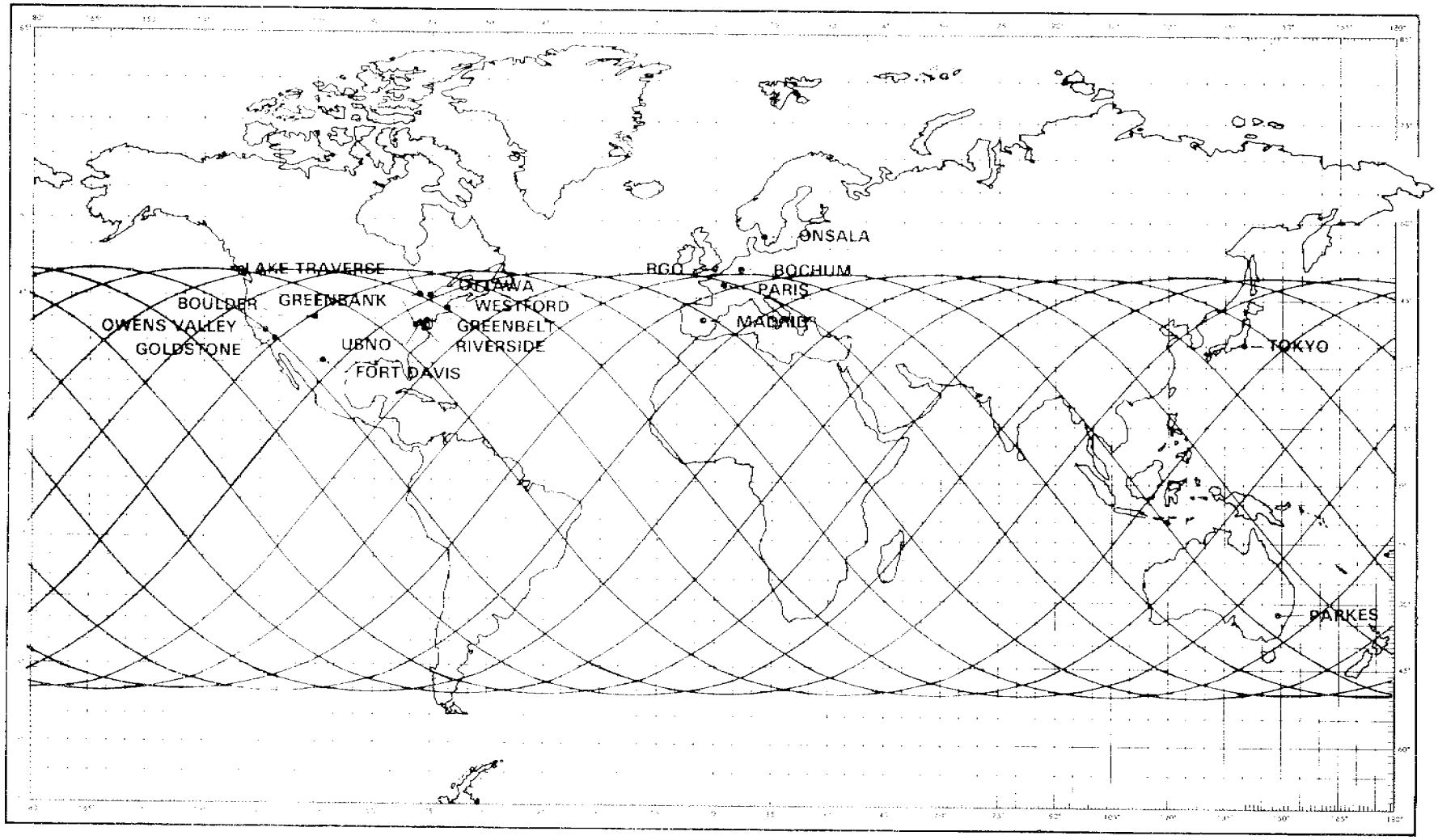

QUESTIONS AND ANSWERS

DR. DERRAL MULHOLLAND, University of Texas:

Don't you have to know not only the orbit of the spacecraft to 15 centimeters, but also the position of the ground station with respect to the geocenter to 15 centimeters and the position of the clock with respect to the CG of the spacecraft to 15 centimeters?

DR. REINHARDT:

No. Let me explain that a little better. This is two-way transfer. Because the shuttle itself is ranging, you have the time that the pulse leaves the spacecraft to the time the pulse arrives. You can compute the time that it arrives on the graph. You don't have to know the location at all. The orbit is only a high-order fraction. The first order, the time that the pulse hits the ground, is just the average of the transmit-to-receive time. There is a very small correction due to the motion of the spacecraft--about 25 nanoseconds. It is so small, in fact, that all path considerations just drop out in terms of accuracy. Does that answer your question?

DR. MULHOLLAND:

It answers it, but it doesn't convince me.

DR. REINHARDT:

It is just a two-way time frame. It is the same as if you had two stations on the ground using a satellite and beaming back and forth over the same path. Don Premo, maybe you can help me.

MR. DON PREMO, NASA Goddard Space Flight Center:

Yes. The reason why we don't have to concern ourselves with the orbit calculations or position of the instrument running through to the center of gravity is that we have measured the path itself. Since we measured that, we don't need to make any calculations of the path. We measured the time it takes for the pulse to travel down to the receiver and to return.