A Modular Multiple Use System for Precise Time and Frequency Measurement and Distribution

by

Victor S. Reinhardt
William A. Adams
Grace M. Lee
NASA-Goddard Space Flight Center

and

Robert L. Bush
Bendix Field Engineering Corporation

ABSTRACT

A modular CAMAC based system is described which has been developed at NASA/Goddard Space Flight Center to meet a variety of precise time and frequency measurement and distribution needs. The system is based on a generalization of the dual mixer concept. By using a 16 channel 100 ns event clock, the system can intercompare the phase of 16 frequency standards with sub-picosecond resolution. The system has a noise floor of 26 fs and a long term stability on the order of 1 ps or better. The system also uses a digitally controlled crystal oscillator in a control loop to provide an offsettable 5 MHz output with sub-picosecond phase tracking capability. A detailed description of the system is given including theory of operation and performance. Also discussed is a method to improve the performance of the dual mixer technique when phase balancing of the two input ports cannot be accomplished.

INTRODUCTION

This paper describes a modular CAMAC based distribution and measurement system developed at NASA/Goddard Space Flight Center to meet a variety of precise time and frequency needs. The system grew out of the desire to minimize the development effort and costs for three system requirements at Goddard Space Flight Center:

1) a frequency combiner/selector (FCS) capable of providing a

reliable 5 MHz output tracked to the average phase of multiple atomic frequency standards, but on time with respect to UTC.

2) an automated data acquisition system capable of intercomparing the phase of multiple atomic frequency standards with sub-picosecond resolution and capable of correlating these intercomparisons with environmental data and UTC.

3) a remote measurement and distribution system (RMDS) capable of distribtuing the 5 MHz output of a frequency standard to a remote site, without degradation in phase stability, for comparisons against remote frequency standards.

System Description

A block diagram of the generalized measurement and distribution system is shown in figure 1. The heart of the system is a phase comparison system which works on a generalization of the dual mixer technique.[1] The phase comparison system includes the multiple mixers, the offset crystal oscillator and the 100 ns multichannel event clock shown on the block diagram. Not shown on the diagram, but essential for proper system operation, are buffer amplifiers which isolate the various 5 MHz channels from each other and low noise zero crossing detectors at the output of each mixer. This phase comparison system uses the offset crystal oscillator to heterodyne into 1 Hz beats 5 MHz inputs from sources whose phases are to be monitored. For the purpose of maintaining system operation independent of any of the 5 MHz inputs, the offset crystal oscillator is left free running. The multichannel event clock records the epoch of these beats to 100 ns. As shown in the theory section, this effectively records the differences in phase between each 5 MHz input and the crystal oscillator to a resolution of 0.02ps. By taking the difference in epoch between two channels, the data bus controller can determine the difference in phase between any two 5 MHz inputs with this same resolution. The multichannel event clock is also used to monitor 1 pps or other TTL pulse sources directly with 100 ns resolution.

The distribution functions of the system are implemented by the D/A controlled crystal oscillator (DXCO) and the RF output control shown on the diagram. Again, not shown but essential to proper operation, are buffer amplifiers in the 5 MHz lines. The frequency of the crystal oscillator is controlled via an 18 bit D/A converter with a fractional resolution of 7.6×10^{-13} per bit. Since the DXCO output is fed back to the phase comparison system, the data bus controller can use the D/A converter to control the phase of the DXCO with sub-picosecond resolution. Actual phase performance depends on the phase noise of the other 5 MHz inputs, the phase noise of the crystal oscillator, and the time constant of the control loop. The RF output control is essentially

an RF switch which connects the 5 MHz output to a back up 5 MHz source in case of control system failure.

Data transfer and logical functions are implemented by a data bus controller. This unit can be a microprocessor built in to the system or an external processor. Of course, data output and program control devices are also part of the system for communication to and from the processor.

HARDWARE DESCRIPTION

The data bus chosen was the IEEE and IEC instrumentation standard called CAMAC.[2] A CAMAC crate with several of the instrumentation modules is shown in figure 2. The advantages of using CAMAC are many fold. First, since CAMAC is an IEEE and IEC standard, one can interchange hardware from many manufacturers. Existing instrumentation can be used with several stand alone microprocessor based bus controllers or can be interfaced to virtually any minicomputer through interface type controllers. Second, many off the shelf modules are available to accomplish PTTI functions. For example, should the need arise to extend the resolution of the event clock, an IEEE 488 (HPIB) interface is available so high resolution time interval counters can be used. Alternatively, time interpolators with resolutions of 50 ps or better are available which can be used in conjunction with the multichannel event clock. Finally, the maximum data rate of the bus, 24 Mbps, is more than adequate for most purposes.

The multichannel event clock is shown in figure 3. This clock is capable of recording the epoch of 16 channels of TTL events (positive or negative edge selectable for each channel) to 100 ns. Whenever one or more events occur during a 100 ns interval, the epoch is recorded in a FIFO memory along with a channel identity word. In this way overlap and dead time problems are taken care of. The FIFO memory can be read as needed by the processor as long as the capacity of the FIFO is not exceeded. Epoch is stored to one day. When one day is exceeded an interrupt is sent to the processor and a bit is set until the processor resets it. In this way, the processor can keep track of the day and year.

The heart of the system is the analog part of the phase comparison system. A brass board is shown in figure 4. This system is also modular. The four larger modules are buffered mixers and zero crossing detectors. The smallest modules are buffer amplifiers and the intermediate module is an eight channel driver amplifier. These units exhibit very low phase noise (see theory section) and low environmental coefficients. Figures 5 and 6 show some typical temperature coefficient measurements of a driver amplifier and a buffered mixer. The buffer amplifiers are essentially identical to the driver amplifier. All temperature coefficients have been measured at 1ps/^{o}C or less.

Figure 7 shows voltage coefficient measurements. Notice that all voltage coefficients are approximately 1ps/V or less.

THEORY AND PERFORMANCE

The phase comparison system is a generalization of the dual mixer phase measurement technique shown in figure 8. In this technique, a transfer oscillator of nominal angular frequency $\omega_0-\varepsilon$ is used to heterodyne the outputs of two reference oscillators of nominal angular frequency ω_0 to two beats of nominal angular frequency ε. As shown in the figure, a time interval counter, set up to measure the time difference between the zero crossings of the two beats, effectively measures the difference in normalized phase ($x = \phi/\omega$) between the two reference oscillators multiplied by the factor ω_0/ε. One thing not shown on the diagram but essential for cancellation of the phase noise of the transfer oscillator is that the time interval between zero crossings be significantly shorter than the correlation time of the low pass filters which determine the noise bandwidth of the system.

In the phase comparison system described here, the offset crystal oscillator is the transfer oscillator. Since N reference oscillator inputs are involved, a single N channel epoch clock replaces N-1 time interval counters. This not only reduces the required hardware, as will be shown later, this improves system operation under certain operating conditions.

To understand the detailed operation of the phase comparison system, consider a 5 MHz input on channel i of the form:

$$V_i = A_i \sin(\omega_0 t + \phi_i(t))$$

and a signal from the transfer oscillator of the form:

$$V_T = A_T \sin(\omega_0 t + \phi_T(t))$$

where all the phase deviation from an ideal signal of angular frequency ω_0 has been put into ϕ_i and ϕ_T respectively. The mixer at channel i outputs a signal of the form:

$$V_M = A_M f(\phi_T - \phi_i)$$

where f(x) is a periodic sine like function whose only important property is that $f(x) = 0$ at $x = n\pi$ (n any integer). The ith zero crossing detector outputs a positive going pulse which is recorded as an event by the 100 ns clock at time t_i given by:

$$\phi_T(t_i) - \phi_i(t_i) = 2\pi n_i$$

The difference in normalized phase ($x = \phi/\omega_o$) between channel i and channel j, for $n_i = n_j$,

is, then:

$$Dx\ (i,j) = x_T(t_i) - x_T(t_j)$$

where:

$$Dx = (\phi_i(t_i) - \phi_j(t_j))/\omega_o$$

and:

$$x_T = \phi_T/\omega_o$$

But:

$$x_T(t_i) - x_T(t_j) = \bar{y}\ Dt$$

where:

$$Dt\ (i,j) = t_i - t_j$$

and $\bar{y}$ is the fractional frequency offset of the transfer oscillator from ω_o averaged over time Dt:

$$\bar{y} = \int_{t_i}^{t_j} \frac{\omega_T - \omega_o}{\omega_o}\, dt$$

This yields:

$$Dx = \bar{y}\ Dt \qquad (1)$$

which states that the difference in the phase of any two channels is given by the difference in zero crossing times of the beats times the fractional frequency offset of the transfer oscillator.

The stability of the measurement system over the time T can be characterized by a two sample variance of Dx:

$$\sigma^2_{Dx}\ (2,\ T,\ Dt) = \tfrac{1}{2} \langle (Dx\ (t) - Dx\ (t + T))^2 \rangle$$

Using (1), this becomes:

$$\sigma_{Dx} = Dt\ \sigma_y\ (2,\ T,\ Dt) \qquad (2)$$

or:

$$\sigma_{Dx} = \sigma_x(2,T,Dt) \qquad (3)$$

where σ_y is the two sample variance for the fractional frequency variations of the transfer oscillator and:

$$\sigma_x = Dt\ \sigma_y$$

From Equations (2) or (3), the stability properties of Dx can be examined. For Dt less than, t_c, the time constant of the zero crossing detectors which determine the noise bandwidth of the system, σ_y is approximately a constant. This means that, for $Dt < t_c$; σ_{Dx} gets smaller as Dt gets smaller. In actual practice, this is limited by noise introduced by the measurement system itself. In the system described (t_c = 13 ms, f_c = 12 Hz):

$$\sigma_{Dx}\ (2,\ 1s,\ 120\mu s) = 2.7x10^{-14}s$$

Figure 9 shows the long term phase stability. Notice it is on the order of 1 ps or better for T up to days. Notice also that during this time the transfer oscillator has varied in frequency by almost 10^{-10}.

For characterizing the resolution of the phase comparison system when measuring frequency, one can form the statistic:

$$\sigma^2_{MY}\ (T) = \frac{1}{4N} \sum_{i=1}^{N} (Dx\ (iT) - 2Dx\ ((i+1)\ T) + Dx\ ((i=2)\ T))^2$$

which in the limit of large N becomes the apparent value $\sigma_y(T)$ for one channel when ideal frequency standards are input to all the channels. For the data shown in figure 9, σ_{Dx} and σ_{MY} are computed in the following chart:

System Performance
(system bandwidth = 12 Hz)

T (s)	N	σ_{Dx} (10^{-14}s)	σ_{MY}
.99	100	2.73	$3.3x10^{-14}$
9.9	100	3.41	$3.9x10^{-15}$
99	1498	10.4	$7.4x10^{-16}$
990	148	28.0	$3.1x10^{-16}$
9900	13	71.2	$5.2x10^{-17}$
10^5	(estimated)	100	$7x10^{-18}$

The value at 10^5 seconds is estimated on the basis of a few days observed performance. A graph of σ_{MY} is shown in figure 10.

For Dt greater than t_c, one can see from (2) or (3) that the phase noise of the transfer oscillator becomes important. There are two components associated with this phase noise, a short term component associated with Dt and a long term component associated with T. That is, for T > > Dt:

$$\sigma^2_{Dx} \cong Dt^2 \ (\sigma^2_y \ (Dt) + \sigma^2_y \ (T))$$

Figure 11 shows this behavior for the case where Dt is about equal to the 1 Hz offset of the transfer oscillator. In figure 11, the "raw phase" is Dt times the average value of y over the time of the plot. Notice that the raw phase has a short term noise component greater than the "phase" of figure 10. Notice also that, for this worst case, the phase tracks the crystal transfer oscillator with about 1 ps for every part in 10^{12} change in frequency.

There is a method, however, for taking out the long term component due to changes in the transfer oscillator. Since the total epoch of each channel is recorded, the frequency of the crystal relative to any channel can be obtained at any time by taking the difference in epoch of the zero crossings of that channel. To obtain the best estimate of the crystal frequency, one can use the channel with the lowest noise input, the average of many channels, or the average over many zero crossings. Using this estimate of the transfer oscillator frequency, $\bar{y}'$, a good estimate of Dx can be obtained:

$$Dx' = \bar{y}' \ Dt \qquad (4)$$

The error in this estimate is give by the difference between (1) and (4):

$$Dx - Dx' = Dt \ (\bar{y} - \bar{y}') \qquad (5)$$

By using a running estimate for $\bar{y}'$, all the long term effects of transfer oscillator changes can be taken out. This is shown in the "corrected phase" of figure 11.

SYSTEM APPLICATIONS

The most stringent application for the measurement and distribution system is the Data Acquisition Facility shown in figure 12. This facility's principle task is to intercompare many hydrogen masers with subpicosecond resolution, to monitor their phase against UTC, and to measure the effects of environmental factors on these masers. For this purpose the CAMAC module is interfaced to a PDP11 computer. Com-

parisons with UTC are made via TV and LORAN-C.

Another application is the Frequency Combiner/Selector (FCS) shown in figure 13. The FCS will use the phase comparison system and DXCO to track a 5 MHz signal to the average phase of multiple cesium frequency standards with a frequency offset. The frequency offset will be adjusted in a secondary phase lock loop to keep the 5 MHz on time with respect to UTC measured via NASA's own Tracking Data Relay Satellite System (TDRSS) or LORAN-C. The processor will carry out fault analysis on all parts of the system and modify system behavior to minimize the consequence of any fault.

A third application is a remote distribution and measurement system. As envisioned now, this system will monitor a 5 MHz signal sent from a main site down a cable and return the same 5MHz to the main site via a parallel cable. By monitoring the changes in phase down both cables, the main site will be able to determine a correction to bring the remote 5 MHz in phase with the 5 MHz at the main site. This information will be sent via modem to the remote system to control its DXCO. The main use of this system will be to intercompare remote frequency standards without loss of stability.

REFERENCES

1. D. W. Allan and H. Daams, "Picosecond Time Diference Measurement System" 29th Annual Symposium on Frequency Control (Atlantic City, 1975).

2. CAMAC Instrumentation and Interface Standards, IEEE Publication (1976, New York)

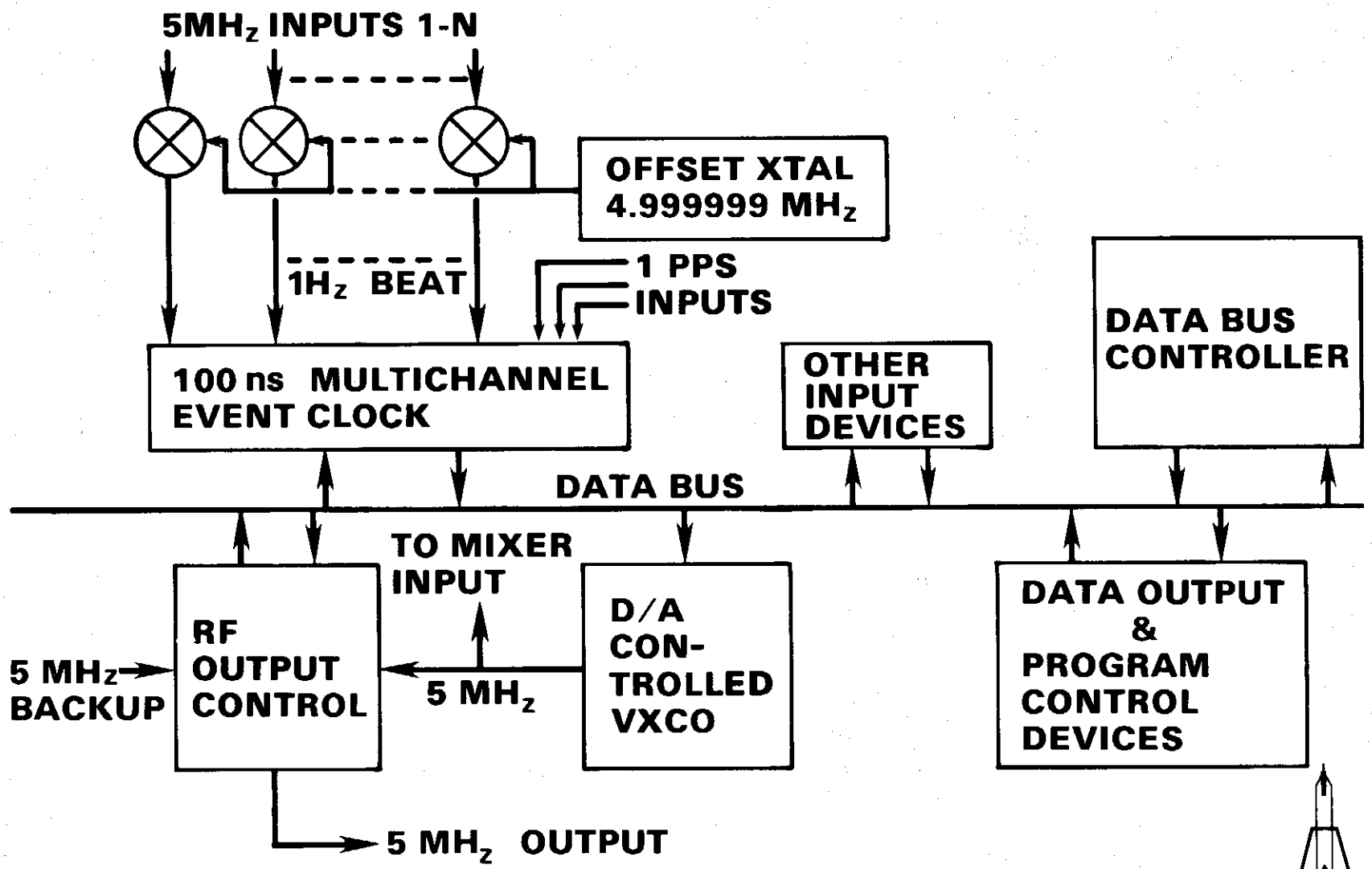

Figure 1. Distribution and Measurement System

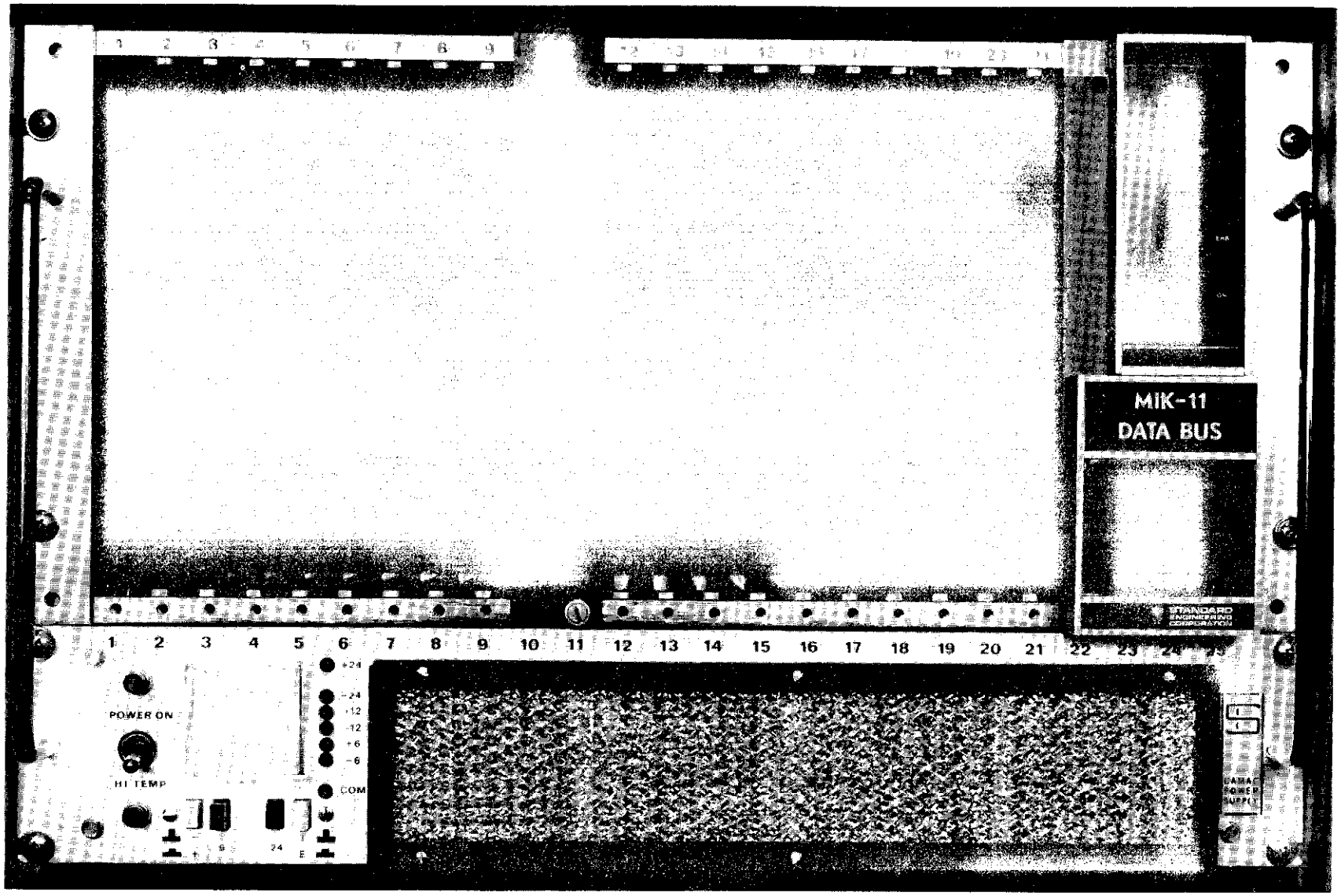

Figure 2. CAMAC Crate

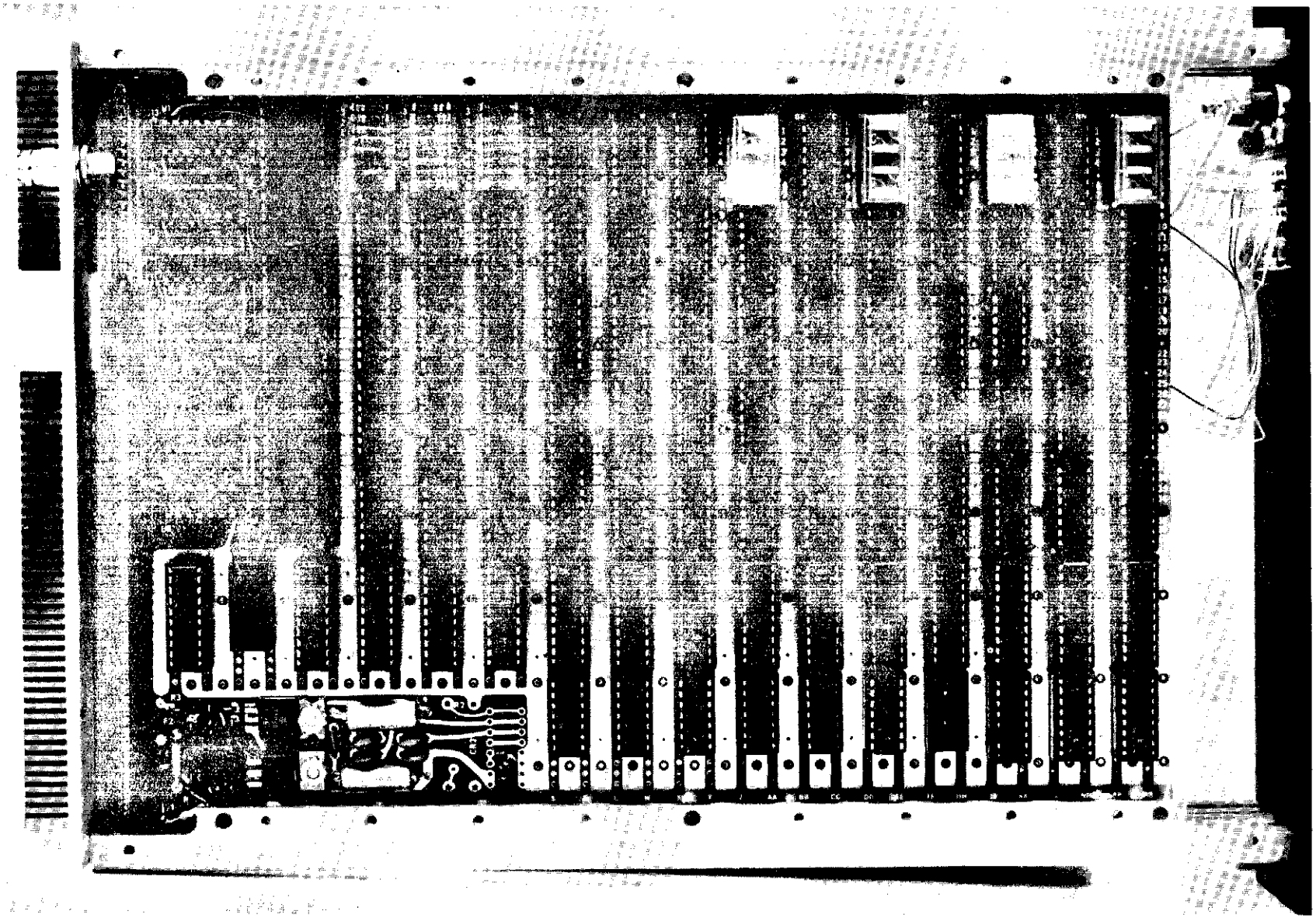

Figure 3. Real Time Clock

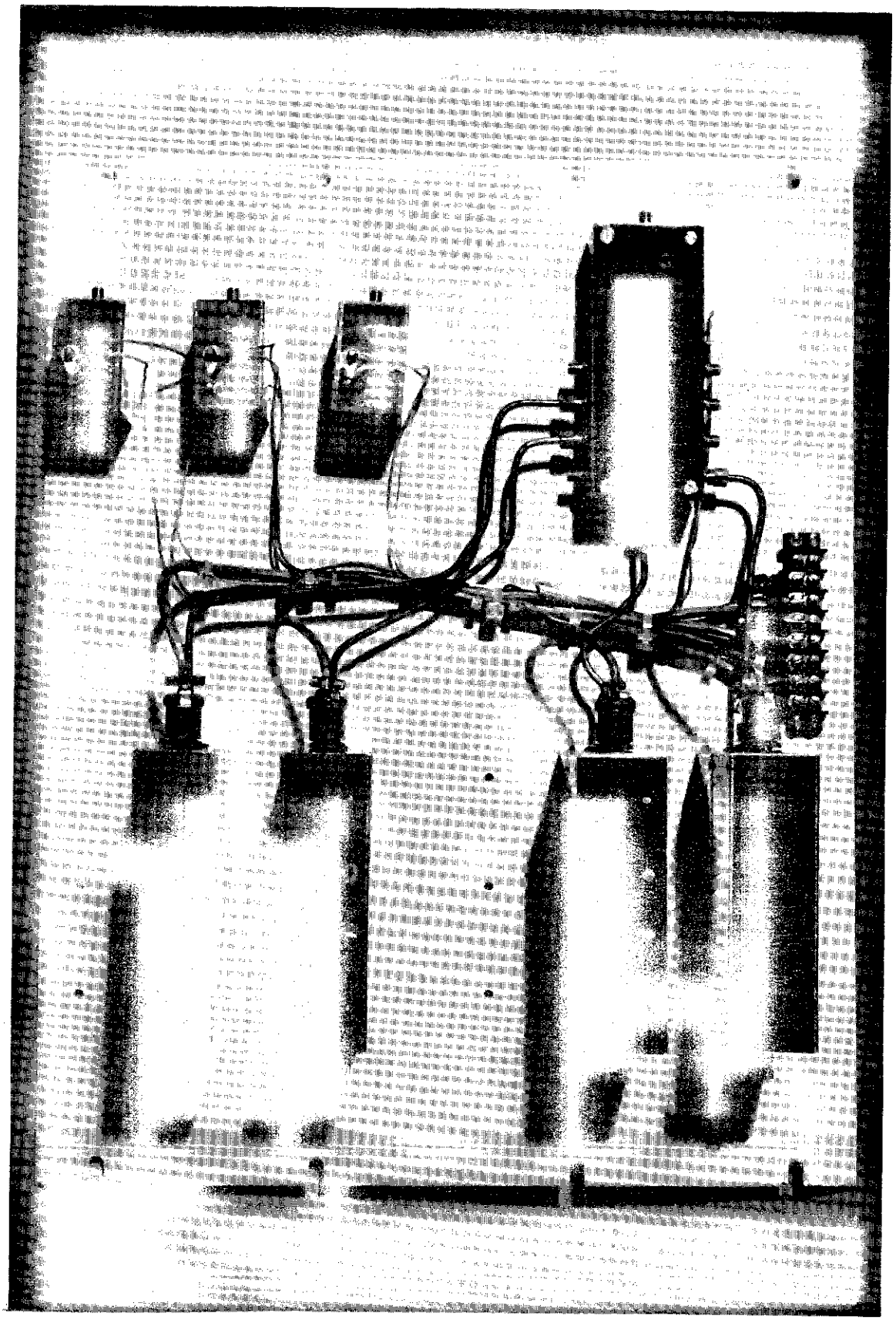

Figure 4. Phase Comparison System

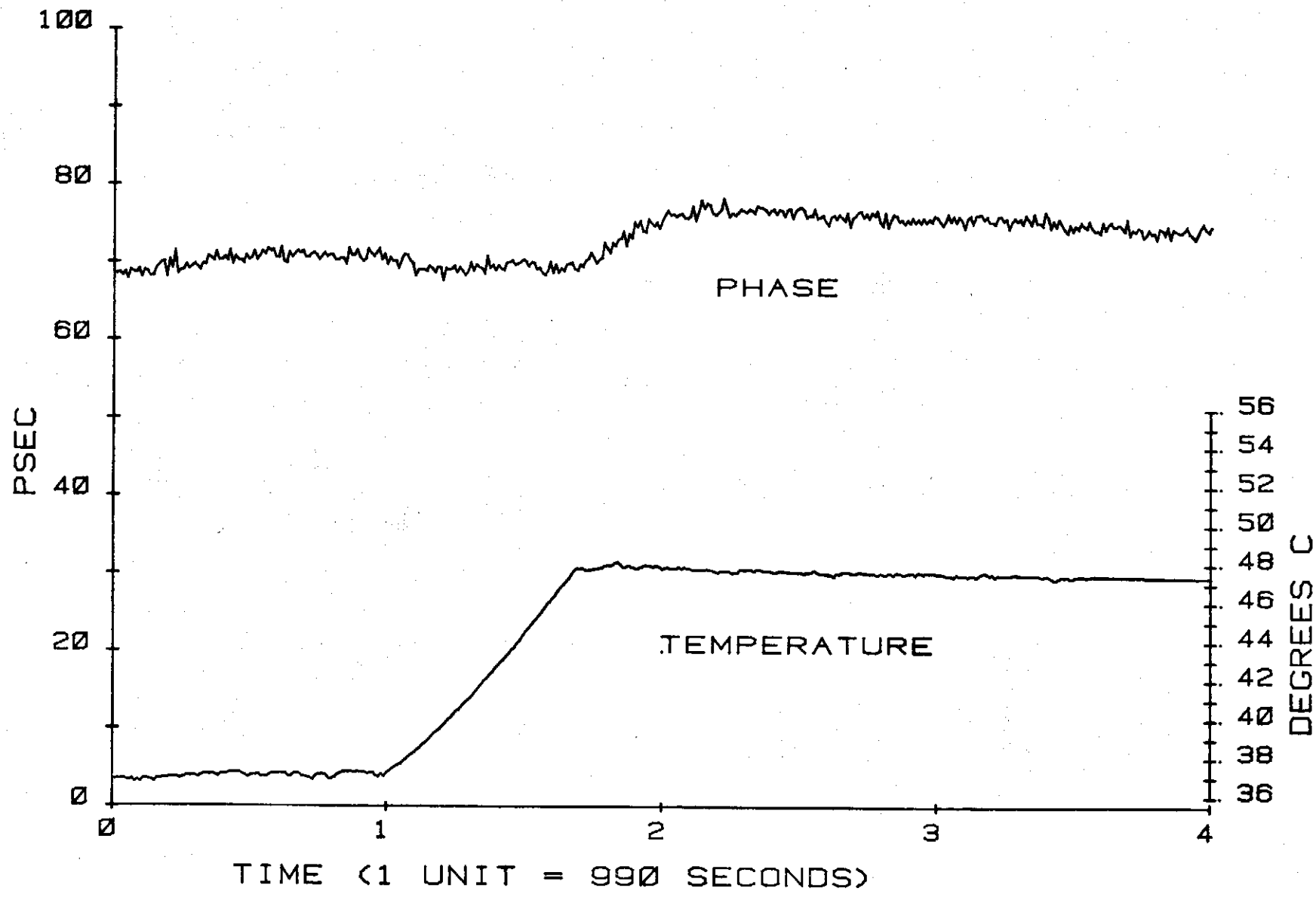

Figure 5. Temperature Coefficient of Driver Amplifier

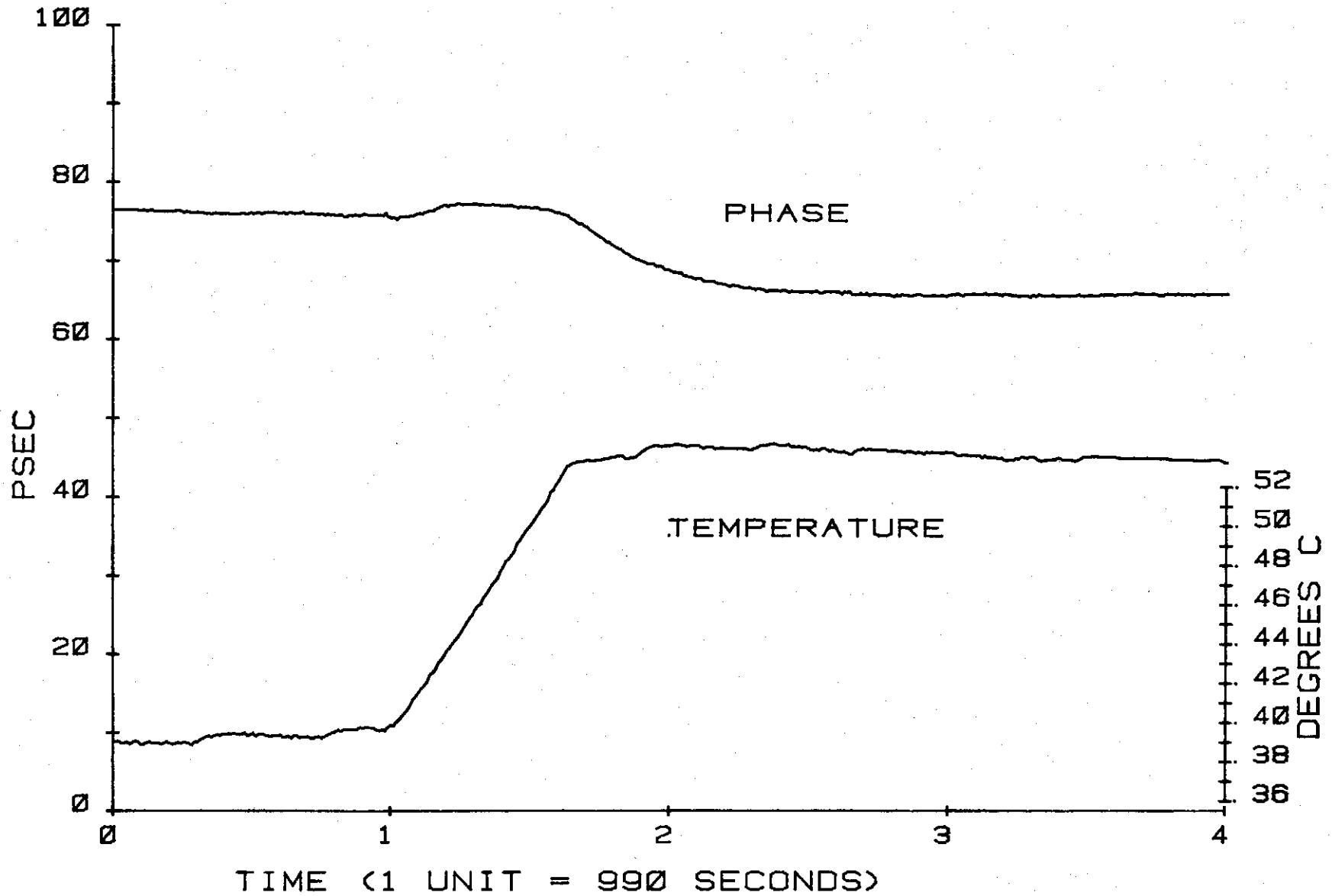

Figure 6. Temperature Coefficients of Buffer-Mixer

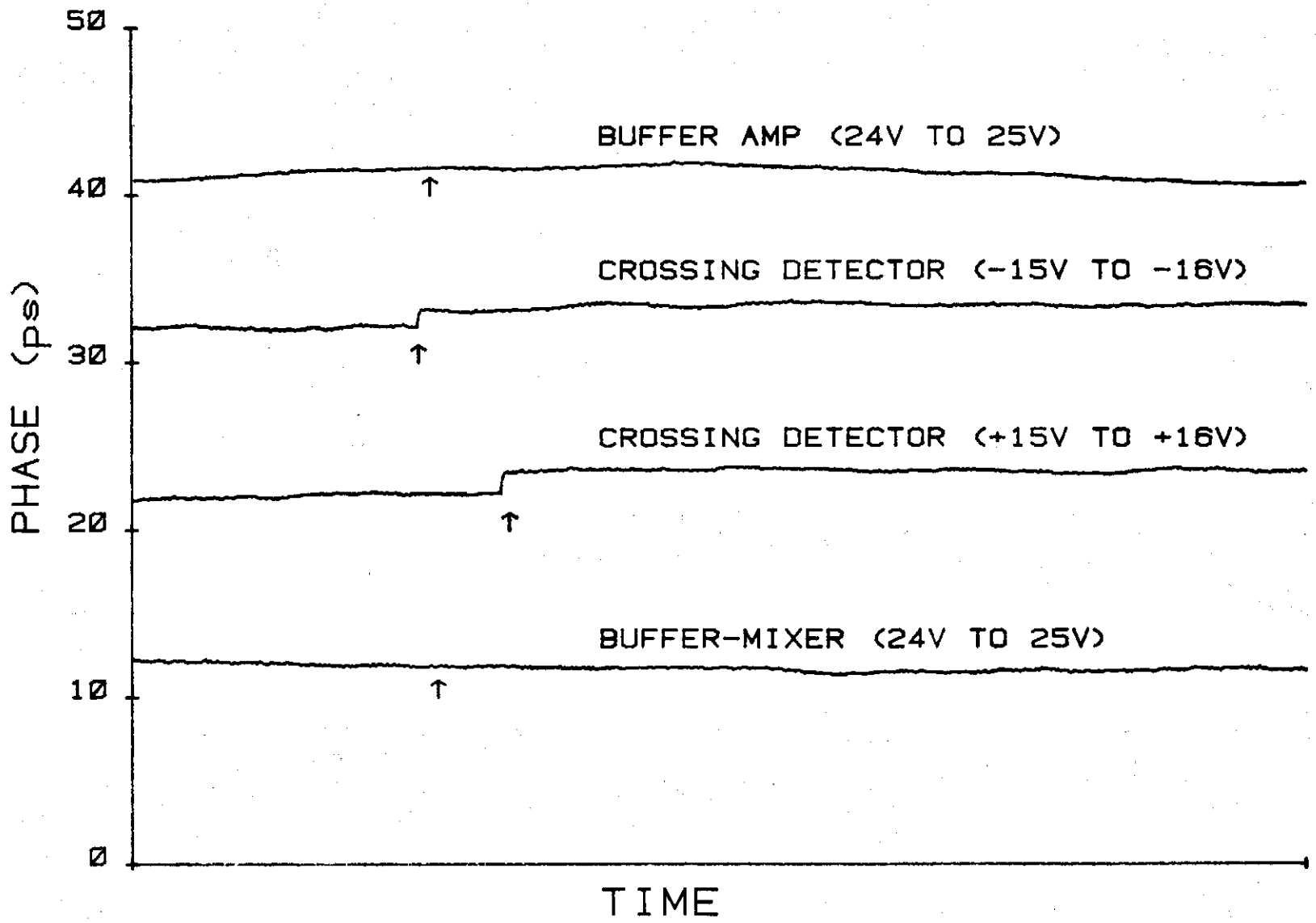

Figure 7. Voltage Coefficients

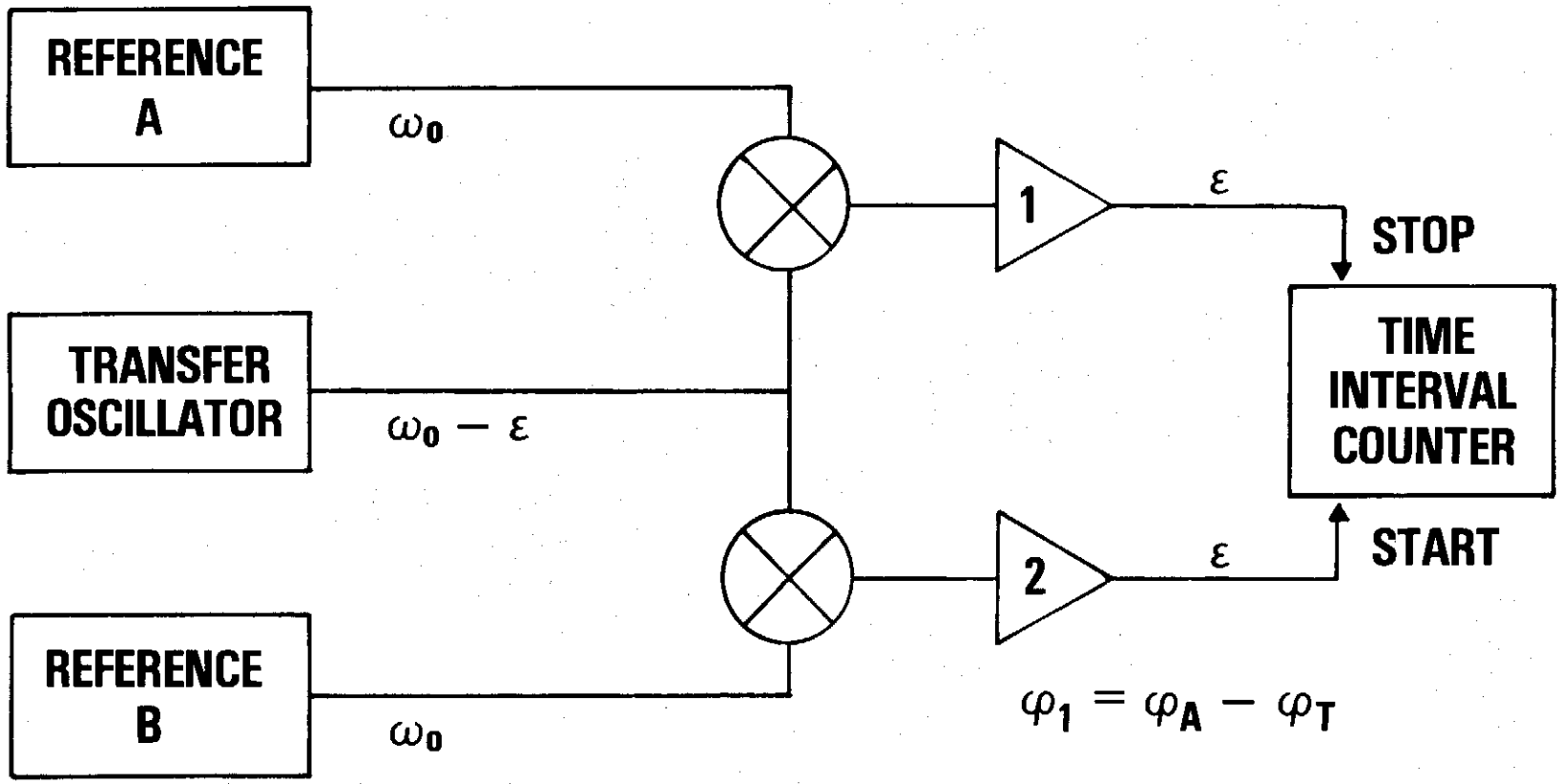

$$\varphi_1 = \varphi_A - \varphi_T$$

$$\varphi_2 = \varphi_B - \varphi_T$$

$$\varphi_1 - \varphi_2 = \varphi_A - \varphi_B$$

$$x_1 - x_2 = \frac{\omega_0}{\varepsilon} (x_A - x_B)$$

Figure 8. Dual Mixer System

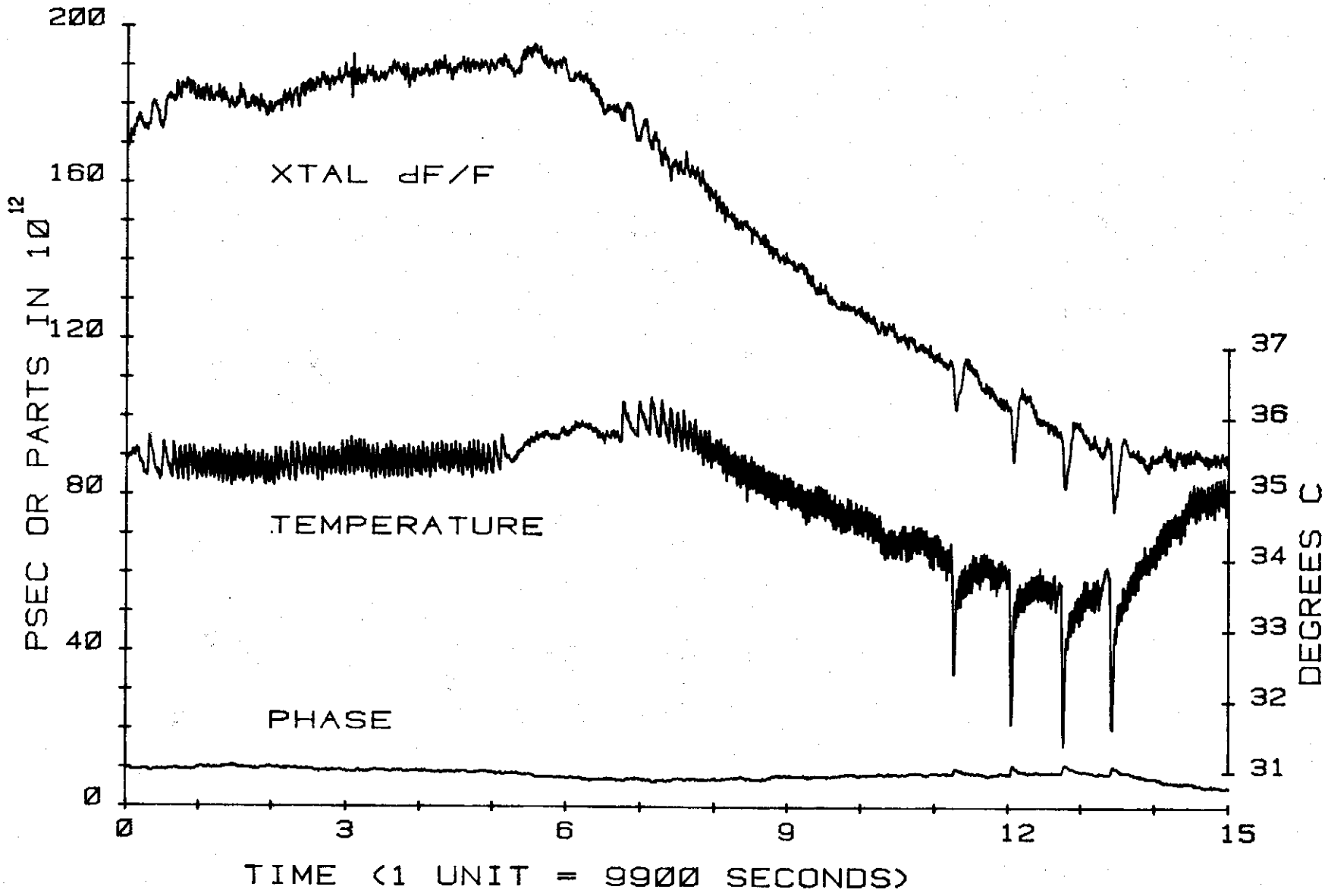

Figure 9. Phase Comparison System Performance (Dt = 120us)

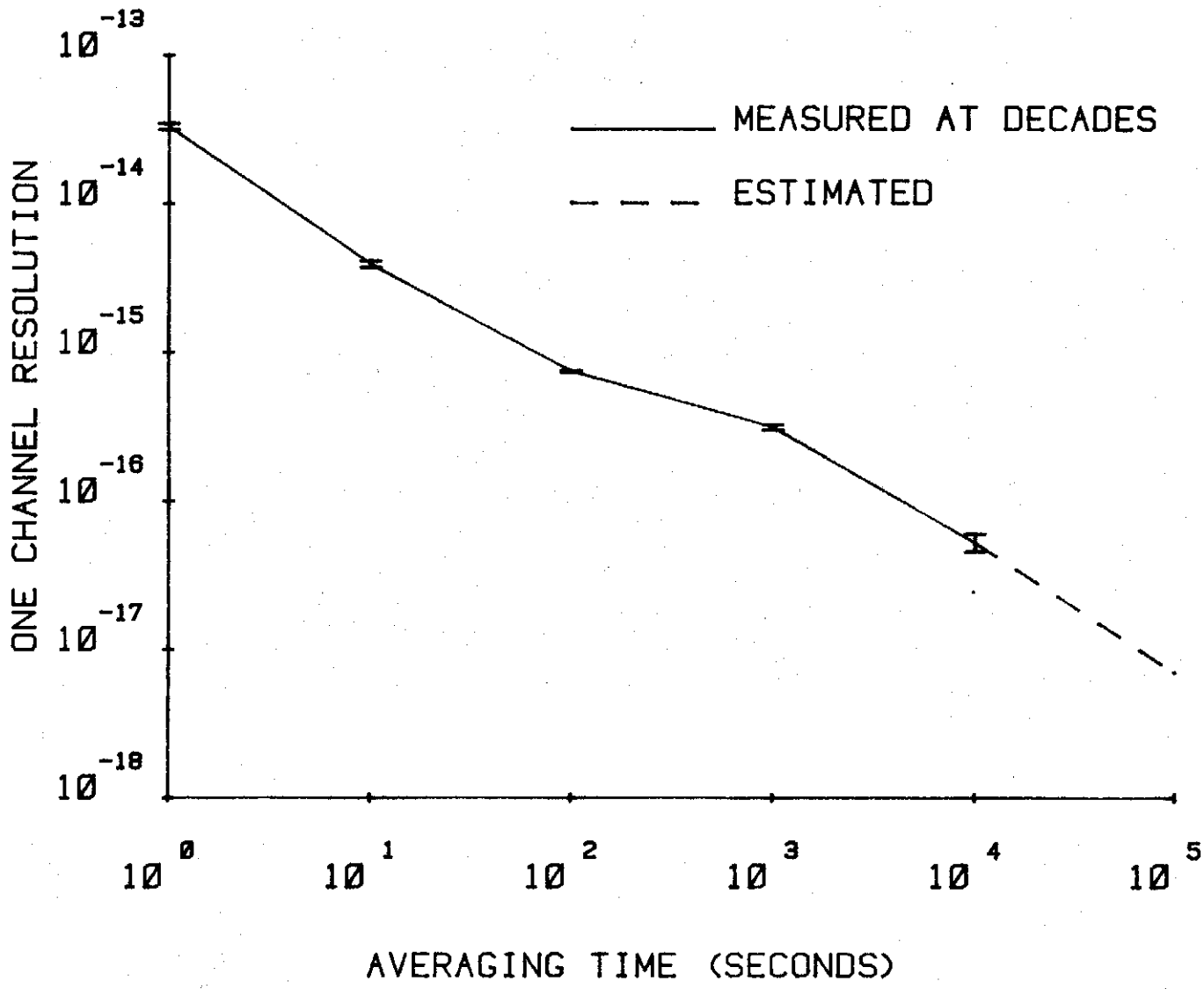

Figure 10. Frequency Measurement Results

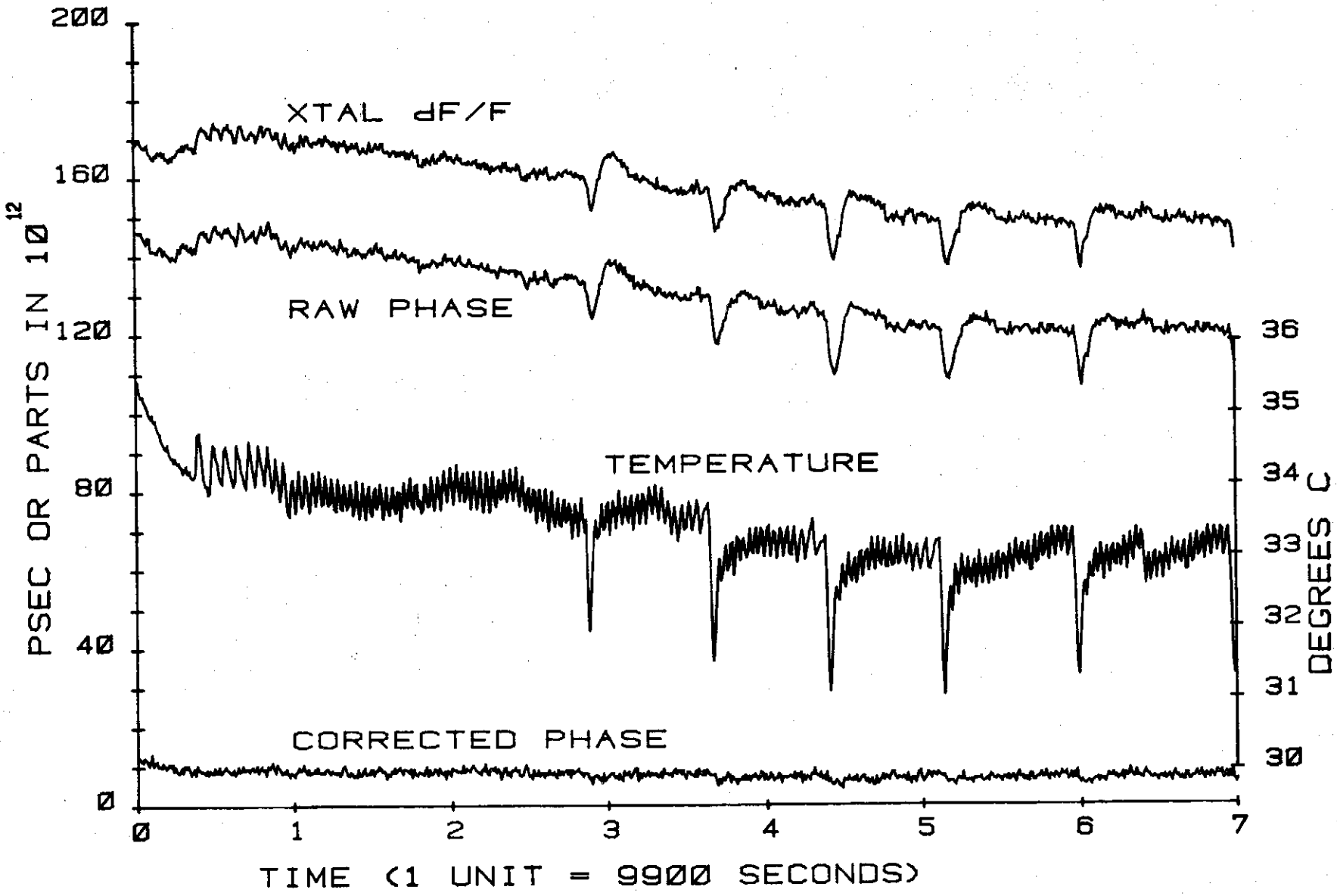

Figure 11. Phase Comparison System Performance (Dt = 990 ms)

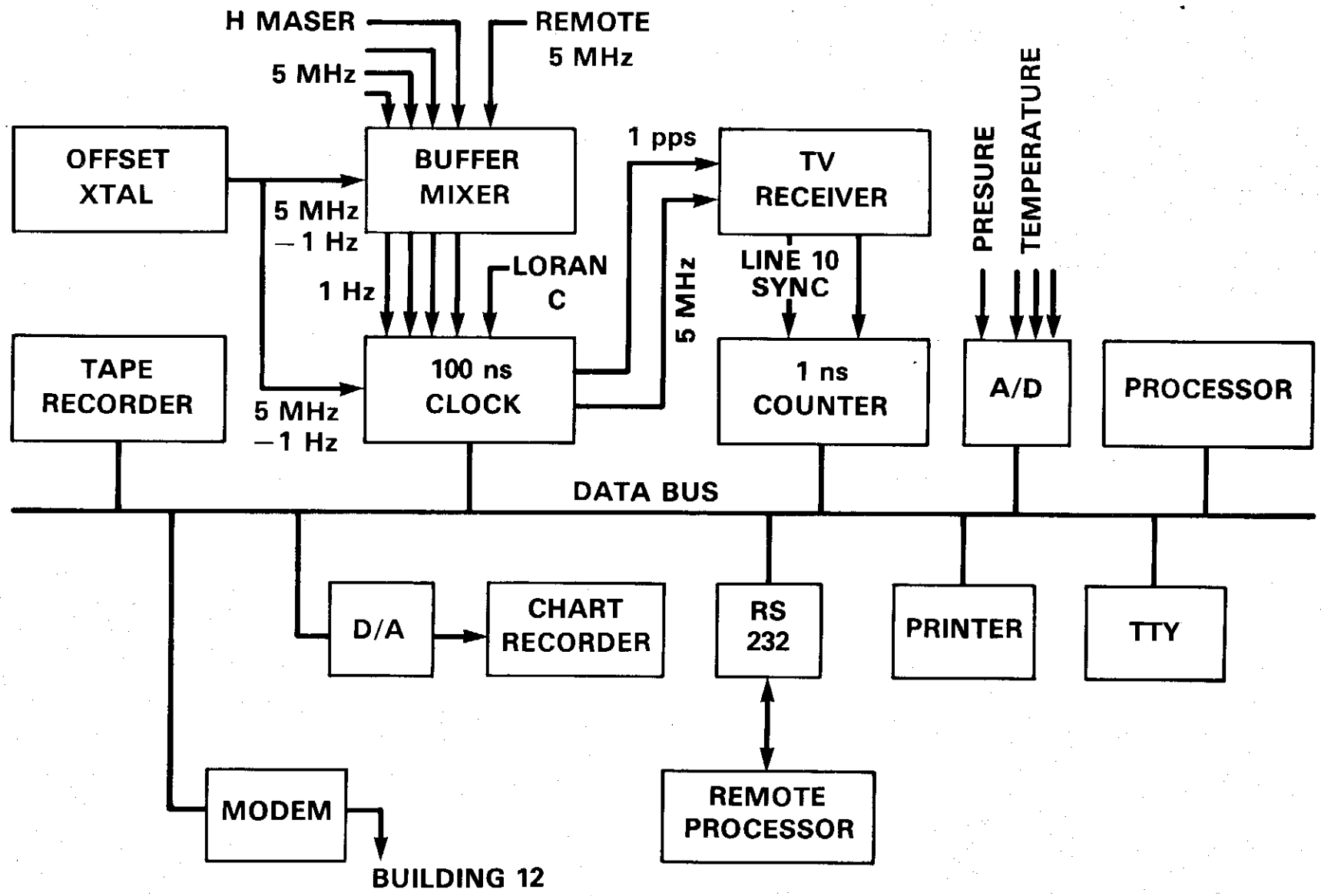
H MASER
5 MHz
REMOTE
5 MHz
OFFSET
XTAL
BUFFER
MIXER
5 MHz
– 1 Hz
1 Hz
LORAN
C
1 pps
TV
RECEIVER
5 MHz
LINE 10
SYNC
PRESURE
TEMPERATURE
TAPE
RECORDER
100 ns
CLOCK
5 MHz
– 1 Hz
1 ns
COUNTER
A/D
PROCESSOR
DATA BUS
D/A
CHART
RECORDER
RS
232
PRINTER
TTY
MODEM
BUILDING 12
REMOTE
PROCESSOR

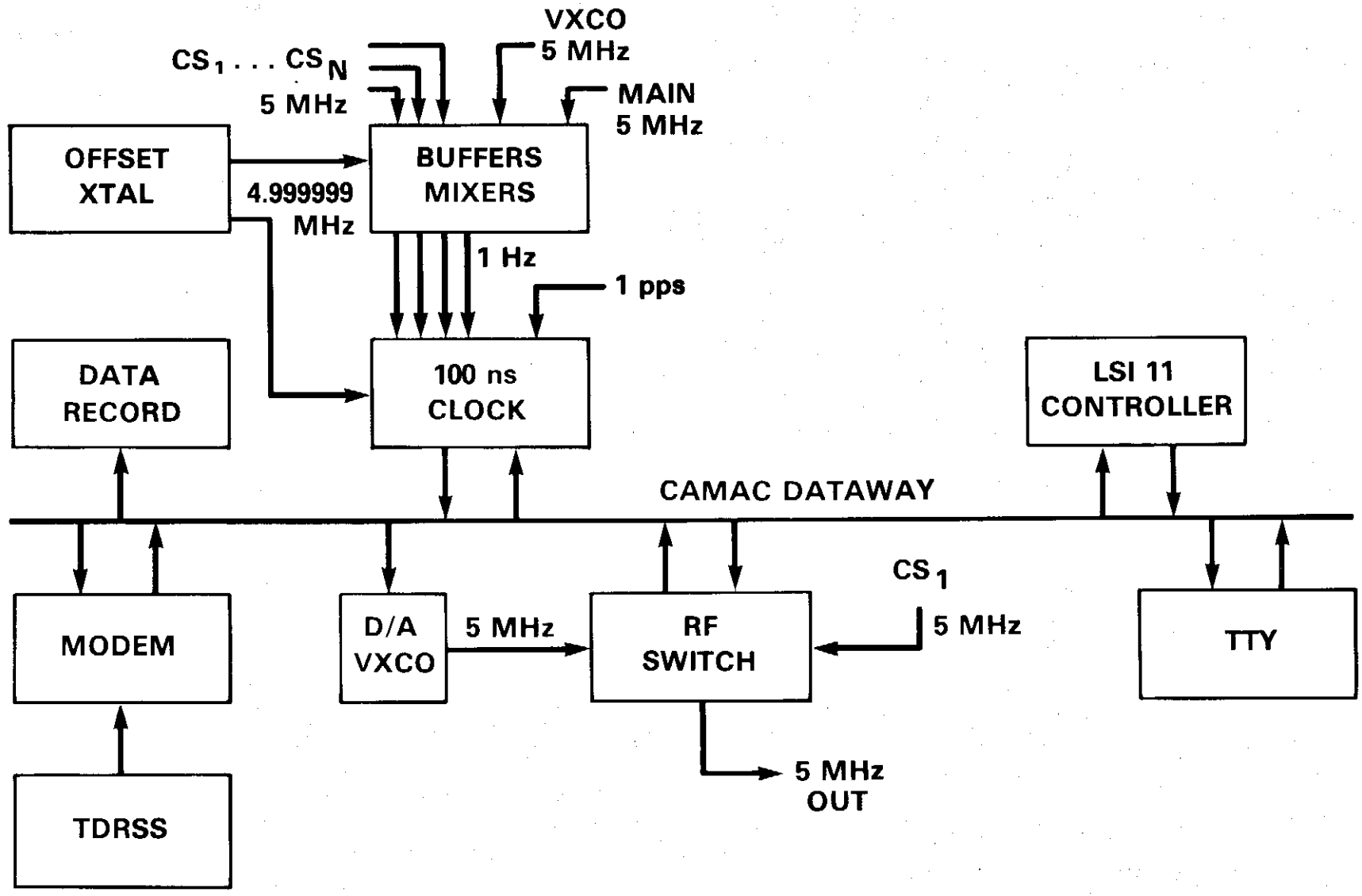

Figure 13. Frequency Combiner/Selector

QUESTIONS AND ANSWERS

DR. HELMUT HELLWIG, National Bureau of Standards:

Can the system or at least parts of it be procurred? If so, how and for how much?

DR. REINHARDT:

That is another reason we went to CAMAC. The only essential part of the system that cannot be procurred off the shelf at this time; that is, the digital parts of the system, is the 100 nanosecond clock.

One thing I didn't mention because time was short was you buy what are called klugeboards, which essentially give you all the hardware and all the interfacing to the CAMAC. And you only wire what you need. And we have wirewrap lists. In fact, if you want one of these 100 nanosecond clocks, contact us because we have been having them wirewrapped outside. It is just a matter of us sending you the drawings and the wire lists. And you can go to the same company that we did and get it wirewrapped. The price? Bob, what was the price of the 100 nanosecond clock?

SPEAKER: About $1,000...

DR. REINHARDT:

That's for the CAMAC crate itself. In fact, you can get that as a full-blown RT 11 operating system with floppy discs for about $12,000. But the microprocessors themselves cost about $3,000 or $4,000. The CAMAC crate is about $1,500.

My rule of thumb is, it is $1,000 per module--per completed module, not klugeboard. The analog parts of the system are, as you can see, also modular. We are making them in-house now. But again, if anybody wants any drawings or anything like that, they should contact us. We have printed circuit board layouts. Thank you.

DR. CARROLL ALLEY, University of Maryland:

How many cesium standards do you plan to include in your ensemble?

DR. REINHARDT:

We have the optimum ensemble for statistical analysis--two. That way, nobody can tell if anything is wrong. Right now we plan to use two. And you obviously get a factor of two improvement in reliability. The idea is to also at least divide the phase ____ by a square root of two while you are doing that. And I have an ulterior motive in this. You can plug a hydrogen maser directly into that system and have it work. It will reproduce the phase specs of a hydrogen maser.

DR. SAMUEL STEIN, National Bureau of Standards:

You can accomplish very much the same results, to remove the instabilities of a common oscillator and to gain the benefit of an event clock, in a small system in hardware, by locking your transfer oscillator to one of your references.

MR. DAVID W. ALLAN, National Bureau of Standards:

In addition to that, if you get an oscillator which has very little phase noise over the beat interval, in your case one second, the noise then becomes immaterial regardless of the phase. We have chosen as one system at NBS to use a 500 hertz beat and a very low, high-quality low-phase noise oscillator. And the phase noise just doesn't enter in.

DR. REINHARDT:

I would like to add a comment to that. The data were actually taken without the full-blown system, and now with these programmable calculators and counters, we just set the counter to alternately measure time interval and period. And so you can effectively do the same thing on a small system with a conventional dual mixer system by just changing the software.