INTERCONTINENTAL CLOCK SYNCHRONIZATION WITH THE BLOCK I VLBI SYSTEM

Mitchell G. Roth, Jet Propulsion Laboratory, Pasadena CA

ABSTRACT

The Block I Very Long Baseline Interferometer (VLBI) operated by the Deep Space Network (DSN) is used to make weekly measurements of the relative epoch and rate offsets between the time standards in the global network of DSN stations. Over the past year, the precision of these measurements has routinely achieved sub-microsecond levels for epoch offset and accuracies of better than one part in 10^{12} for rate offset. The implementation of the phase calibrator system will permit absolute measurement of epoch offset to better than 10 nanoseconds. With the near-real-time playback and on-line storage of VLBI data, the Block I system typically produces clock parameters within 48 hours from the time of observation.

INTRODUCTION

The Block I VLBI (Very Long Baseline Interferometry) system [1] has been developed at JPL to provide Deep Space Station (DSS) clock synchronization, platform parameter determination (UT1 and polar motion-UTPM) and spacecraft navigation in nearly real time. The accuracy goals for the system in the 1981 time frame call for measurement of epoch offset to 150 ns, rate offset to 0.6 ps/s, and UTPM to 30 centimeters in each component. During critical events, such as planetary encounters, the results are to be available within 24 hours from the time of data acquisition. With the implementation of the phase calibrator system, now nearly completed, the accuracy of the epoch offset measurements will improve to better than 10 nanoseconds.

From 1980 December to 1981 August, system development was carried out concurrently with observations designed to monitor clock parameters and UTPM. This report describes the steps involved in conducting and processing the observations and the results that were obtained for the clock parameters.

Block I VLBI System

The Block I system is implemented at the Deep Space Network (DSN) 64 meter radio telescopes located at Madrid, Spain (DSS 63) Canberra, Australia (DSS 43) and Goldstone, California (DSS 14). The hardware

configurations at all three stations are identical, consisting of S and X-band receivers, phase calibrators, channel multiplexers, analog to digital converters and tape recorders, as shown in Figure 1 for a pair of stations. The receivers use maser front ends to achieve system temperatures of 25°K over a 40 MHz bandpass at S-band and 100 MHz at X-band. Up to 4 channels may be recorded in each band by time multiplexing to obtain a maximum spanned bandwidth of 40 MHz. Individual channels have bandwidths of 250 KHz and are digitized by sign, time tagged and then recorded at 500 Kb/s on digital tape. The frequency and timing systems at the station are controlled by hydrogen masers with frequency stabilities of $\Delta f/f < 10^{-14}$. The recorded data are replayed from the stations to JPL over the NASCOM wide band data lines at 56 Kb/s, where they are stored on the discs of the VLBI processor for cross-correlation. When the data from both stations have been received at JPL, usually within 10 hours of the observations, they are cross-correlated. The resulting correlation function is analyzed by the post-correlation software of the VLBI processor to determine clock parameters and UTPM.

Observation Procedures

Beginning in 1980 weekly VLBI observing sessions were scheduled on both the California-Spain and California-Australia baselines for the purpose of monitoring clock parameters and UTPM and for Block I system development and testing. In most cases both baselines were observed in the same 24 hour period. Estimation of clock parameters requires only a single baseline, but UTPM estimates require two baselines to separate the three components.

For each baseline, 7 to 13 extragalactic radio sources from the JPL navigation source catalog [2] were observed for 200 seconds each. The sources to be observed were chosen to give an observation schedule which would minimize the correlations between the clock and UTPM parameters. For most of the 1981 observations, the scheduling of sessions was governed by DSS availability. However, during the period from DOY 136 through DOY 200, a sidereal schedule was employed, which permitted the same sources to be observed each week for 10 consecutive weeks. The sidereal schedule consisted of a set of 12 sources observed in the same sequence each time. The observing time shifted at the sidereal rate of approximately 4 minutes per day so the same sources could be used for each session. This schedule was very useful for distinquishing between random and systematic errors.

Initially, the data were acquired in 4 S-band and 4 X-band channels for bandwidth synthesis with a maximum spanned bandwidth of 30 MHz in each band. To improve the signal to noise ratios, the configuration was changed to 3 channels per band with a maximum span of 40 MHz on 1981 DOY 107.

Data were recorded at each station on digital tape at the rate of 500 Kb/s. The total on-source time per baseline was nominally 2000 seconds, corresponding to 10^9 bits. These data required about 5 hours for transmission to JPL via the 56 Kb/s wide band data lines. Beginning on 1981 DOY 86, the data were logged directly onto the disc storage units of the VLBI processor. Prior to DOY 86, the data were first recorded on magnetic tape when received at JPL and then read into the VLBI processor. With the advent of direct disc playbacks, the tape recordings were used as a backup capability in the event of a system malfunction.

Data Reduction

The first step in the reduction of the data was the cross-correlation of the two streams of data. The Block I correlator performs 16 simultaneous cross-correlations over a bitstream alignment (BSA) delay range of 32 microseconds. Since the principal component of BSA delay is the epoch offset between the station clocks, this offset must be known accurately enough to place the correlation function in the 32 microsecond window. If the offset was not known, the correlator operator would search for the correlation function in steps of 32 microseconds. Once found, the correlation function was centered by adjusting the epoch offset, and a data file containing the cross-correlation function and instrumental phase calibrations was produced.

The next step in the processing, phase tracking, estimated the correlation function parameters for each radio source. The correlation function for each data channel is completely described by four parameters: amplitude, phase, phase rate, and BSA delay. These were determined by a least squares fit to the correlator output. Bandwidth synthesis (BWS) delays were calculated from the phase differences between the data channels in each band. The BSA delays, BWS delays, and single channel phase rates were the VLBI observables from which the clock and UTPM parameters were estimated.

In the final step of processing, the clock and UTPM parameters were estimated from the VLBI observables. It is important to note that instrumental phase calibration is required for the absolute measurement of epoch offset. In the absence of phase calibration, the delay observables are corrupted by instrumental delays. However, the BSA delays may be used to measure relative epoch offsets containing an unknown bias due to the instrumental delays, provided that the instrumental delays are constant in time. This approach was used to obtain the epoch offset data presented in this report. Although the BWS delays are inherently much more precise than the BSA delays, they are useless for epoch offset measurements without phase calibration because of the difficulty in resolving BWS cycle ambiguities. However, uncalibrated BWS delays can be used for UTPM estimates. In this

context, the resulting epoch offsets are meaningless, but the corresponding sigmas are representative of the values that would be obtained if the BWS delays were properly calibrated. Frequency standard rate offsets were estimated from the X-band phase rate observables.

Clock Synchronization Results

Of the 55 observing sessions conducted from 1980 Decemter to 1981 August, 36 produced useful data for clock synchronization. These results are shown in Figures 2-5. Epoch offsets from Voyager 2 VLBI navigation data also plotted on these figures and are in good agreement with the clock synchronization data. The epoch offset uncertainties ranged from 35 to about 200 ns and the rate offset uncertainties varied from 0.13 to 1.52 ps/s. These data were processed without phase calibration for instrumental delays. Therefore, an unknown bias is present in the reported epoch offset values. Comparisons with the offsets measured by a travelling clock indicate that the bias was smaller than one microsecond on both baselines. The VLBI data gave independent confirmation of two known clock anomalies. The steep slope (1) in Figure 2 at the end of 1980 was due to the use of a Cesium standard at Madrid (DSS 63). The anomalous points denoted by hollow symbols (2) on Figures 2 and 3 were caused by a 1 microsecond retardation of the Goldstone (DSS 14) epoch as measured by the Frequency and Timing Systems standards laboratory. The cause of the erratic behavior (3) in Figure 2 is not yet known.

The long term clock rate calculated from the slope of the epoch data was found to be .05 $\pm$ .02 ps/s on the California-Spain baseline, excluding 1980 data and 1981 data after DOY 165. All points were equally weighted in the linear regression because it was felt that some of the reported uncertainties were exaggerated by systematic errors due to inconsistencies between the source catalog positions and the precession model in the rapid analysis software. The RMS of the residuals was 92 nanoseconds. On the California-Australia baseline, the long term rate offset was 0.51 $\pm$ .01 ps/s. The RMS of the residuals was 89 nanoseconds. These values agreed with determinations made by LORAN on the Californa-Spain baseline and by travelling clocks combined with television time transfer on the California-Australia baseline. On both baselines the VLBI measurements were about 10 times more accurate. The X-band rate data for the California-Spain baseline shown in Figure 4 had a mean of -0.14 $\pm$ 0.20 ps/s with an RMS of 0.84 ps/s. While the mean was consistent with the long term rate, the comparatively large RMS of the residuals is believed to be caused by media effects and the previously mentioned problem concerning the precession model. The rate data for the California-Australia baseline in Figure 5 exhibited similar behavior. The mean was 0.41 $\pm$ 0.19 ps/s with an RMS of 0.79 ps/s.

The sources of error in the epoch measurements are shown in Figure 6 for the cases of uncalibrated S-band BSA delays and calibrated X-band BWS delays. For BSA delays, the largest error is system noise, a direct result of the narrow 250 KHz channel bandwidths. The instrument phase and S band ionospheric effects also contribute significantly to the total error of 76 ns, which agrees fairly well with RMS values obtained in fitting the epoch data to a linear model. The slightly larger residuals in the data can be explained by noting that the actual number of sources per session was somewhat smaller than expected.

With phase calibration at X-band, the BWS delays provide an order of magnitude improvement in accuracy. In this case the dominant sources of error are the source position, troposphere and geophysical models, for a total error of 8.0 nanoseconds. Analysis of actual BWS data indicates that this level of accuracy is realistic. Using the master fitting software at JPL to solve for clock and UTPM parameters, the epoch uncertainties were typically 5 nanoseconds and the rate uncertainties were about 0.2 ps/s. These uncertainties should be slightly decreased by the introduction of phase calibration.

Summary

The Block I VLBI system has provided relative epoch offset measurements derived from BSA delays with a precision of better than 100 ns, typically within 24 hours of data reception. The long term rate offsets determined from these epochs have uncertainties of about .01 ps/s. These rates agree with LORAN determinations and are about 10 times more accurate. The VLBI data has independently confirmed known clock anomalies. The precession model in the rapid analysis software should be updated to match the source catalog to obtain the full precision of the rate offset measurements, which would be about 0.2 ps/s. The implementation of the phase calibration system will allow the BWS delays to be used for absolute epoch offset measurements with an accuracy of better than 10 nanoseconds.

Acknowledgements

Sam Ward provided invaluable assistance with the analysis and interpretation of the clock synchronization data. John LuValle, Phil Harmon, Tom Runge, and Marshall Eubanks assisted with the correlation and reduction of the VLBI data.

References

[1] "The DSN VLBI System Mark IV-85," W. D. Chaney, TDA Progress Report, 42-64, pp 61-76, 1981 May-June.

[2] "Development of a Radio-Astrometric Catalog By Means of Very Long Baseline Interferometry Observations," J. L. Fanselow, et al., in Reference Coordinate Systems for Earth Dynamics, E. M. Gaposhkin and B. Kolaczek (eds.), pp 351-357, Reidel (1981).

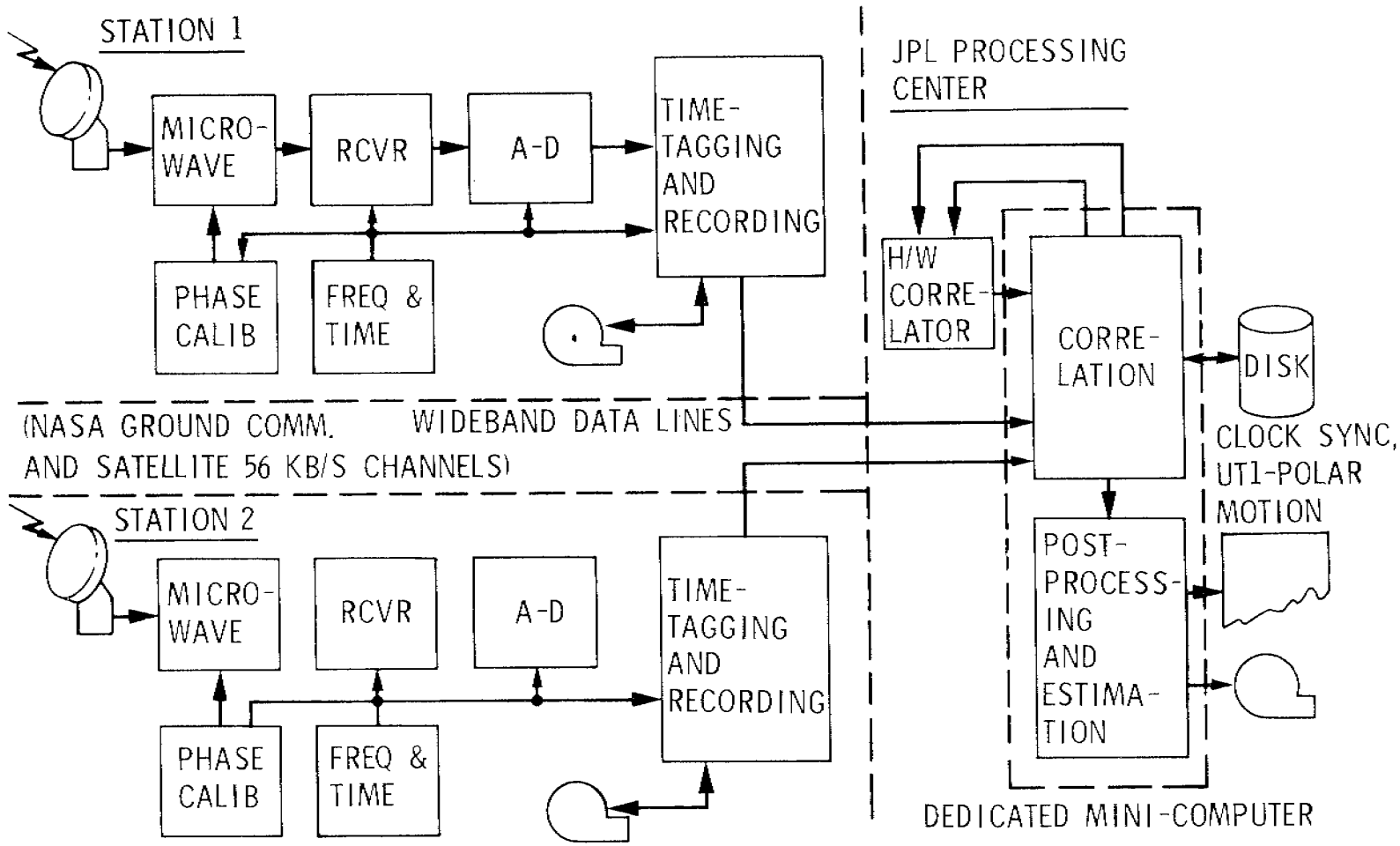

Figure 1. Block 1 VLBI System Configuration.

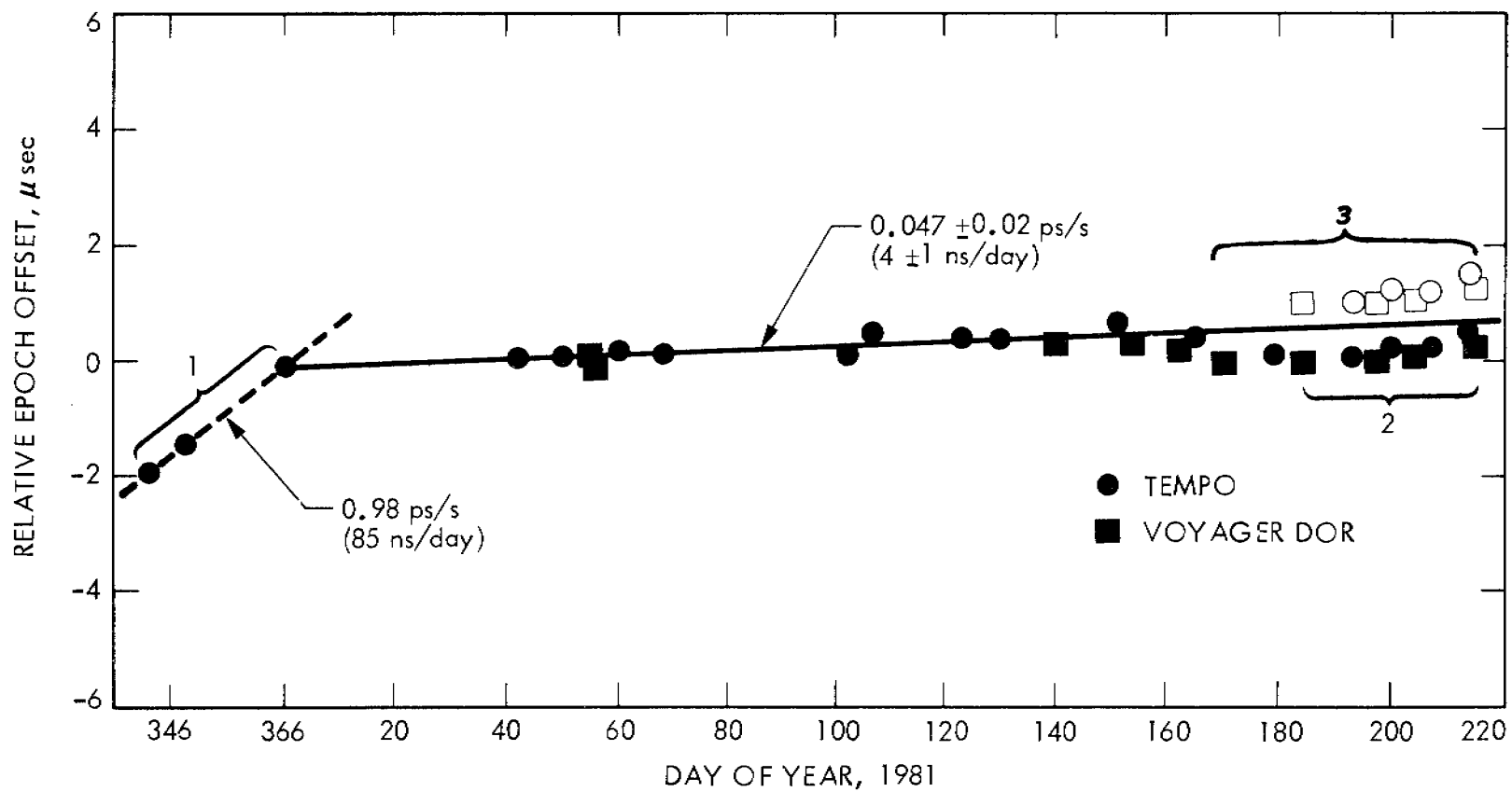

Figure 2. DSS 63-DSS 14 Epoch Offsets

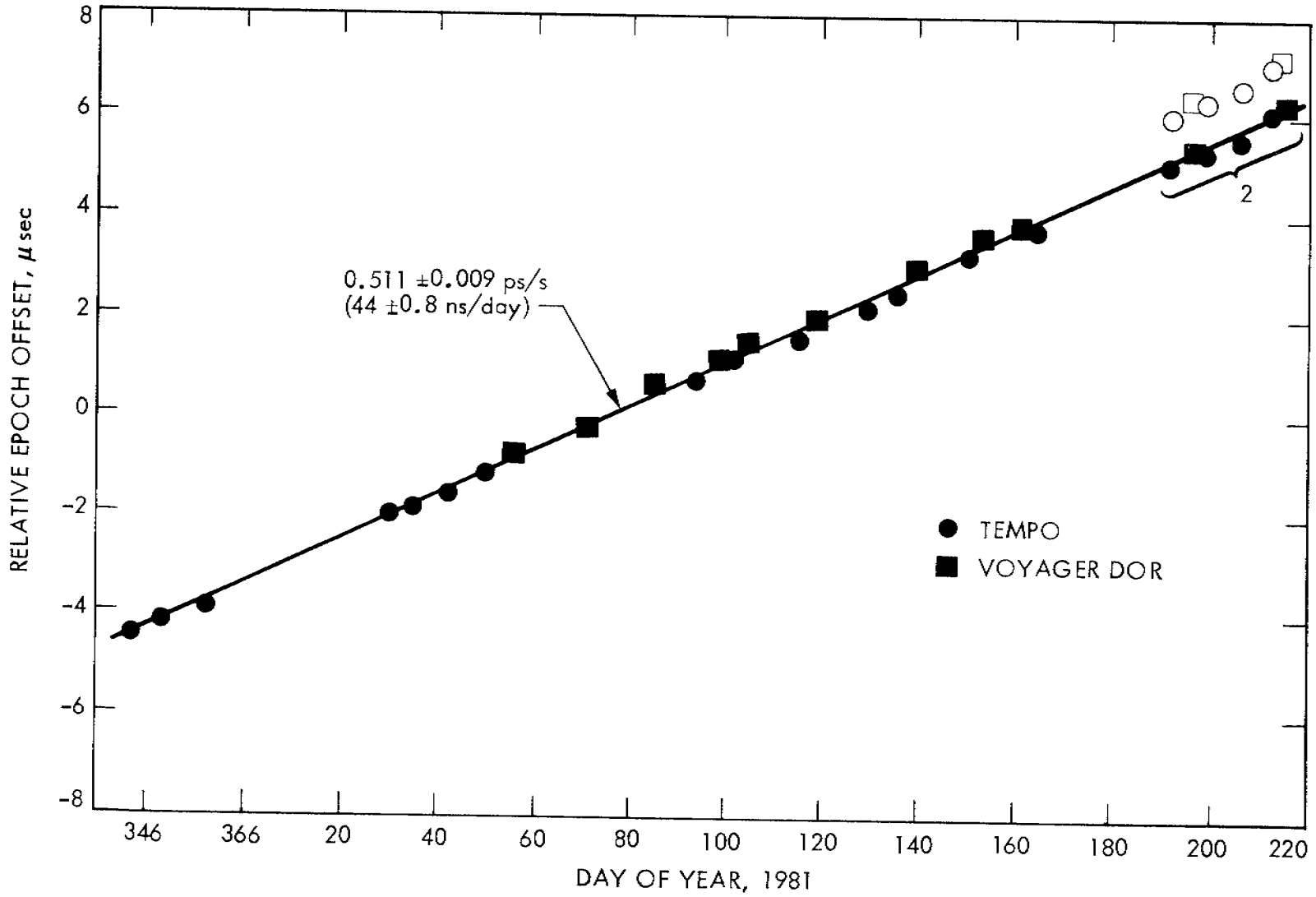

Figure 3. DSS 43-DSS 14 Epoch Offsets

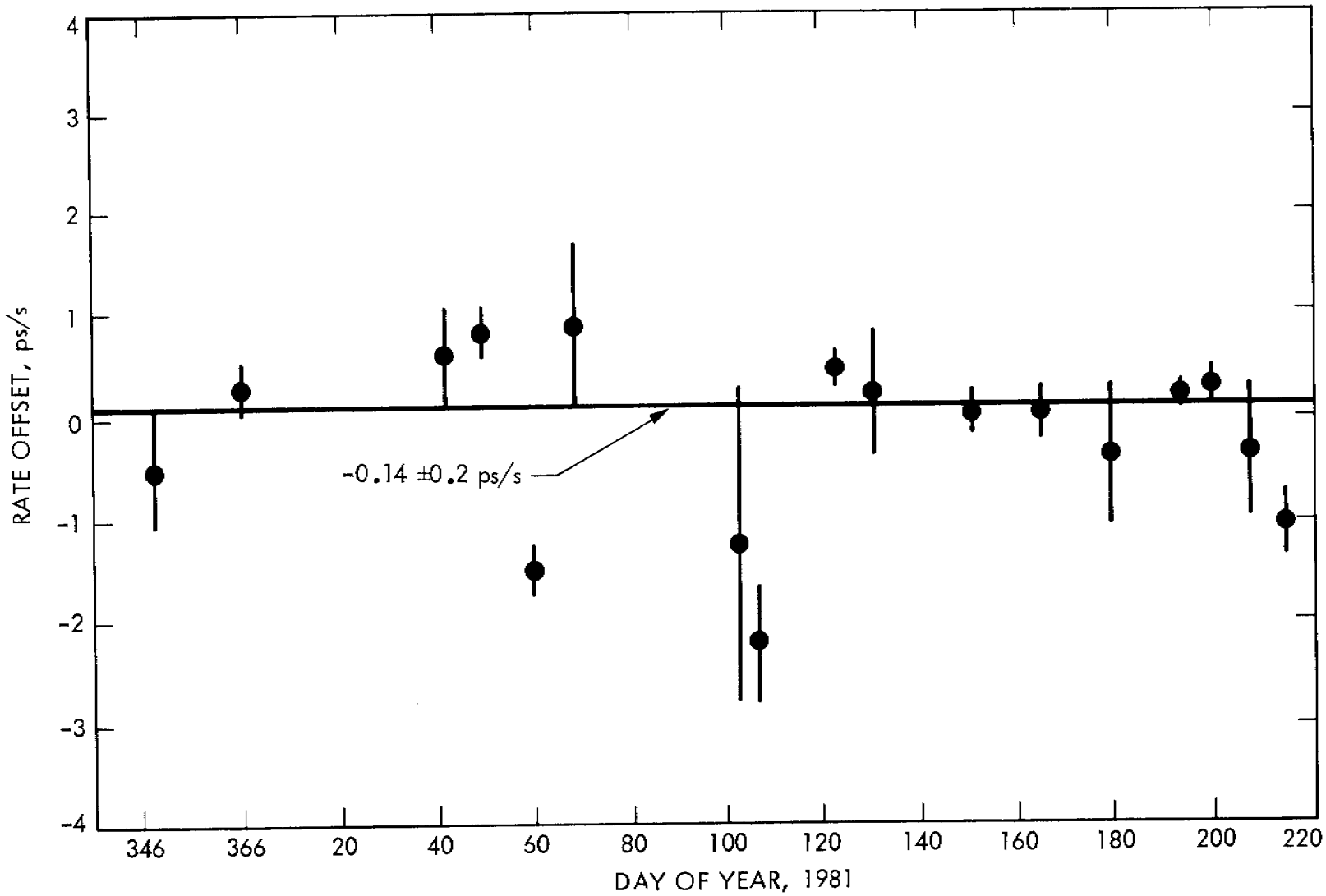

Figure 4. DSS 63-DSS 14 Rate Offsets

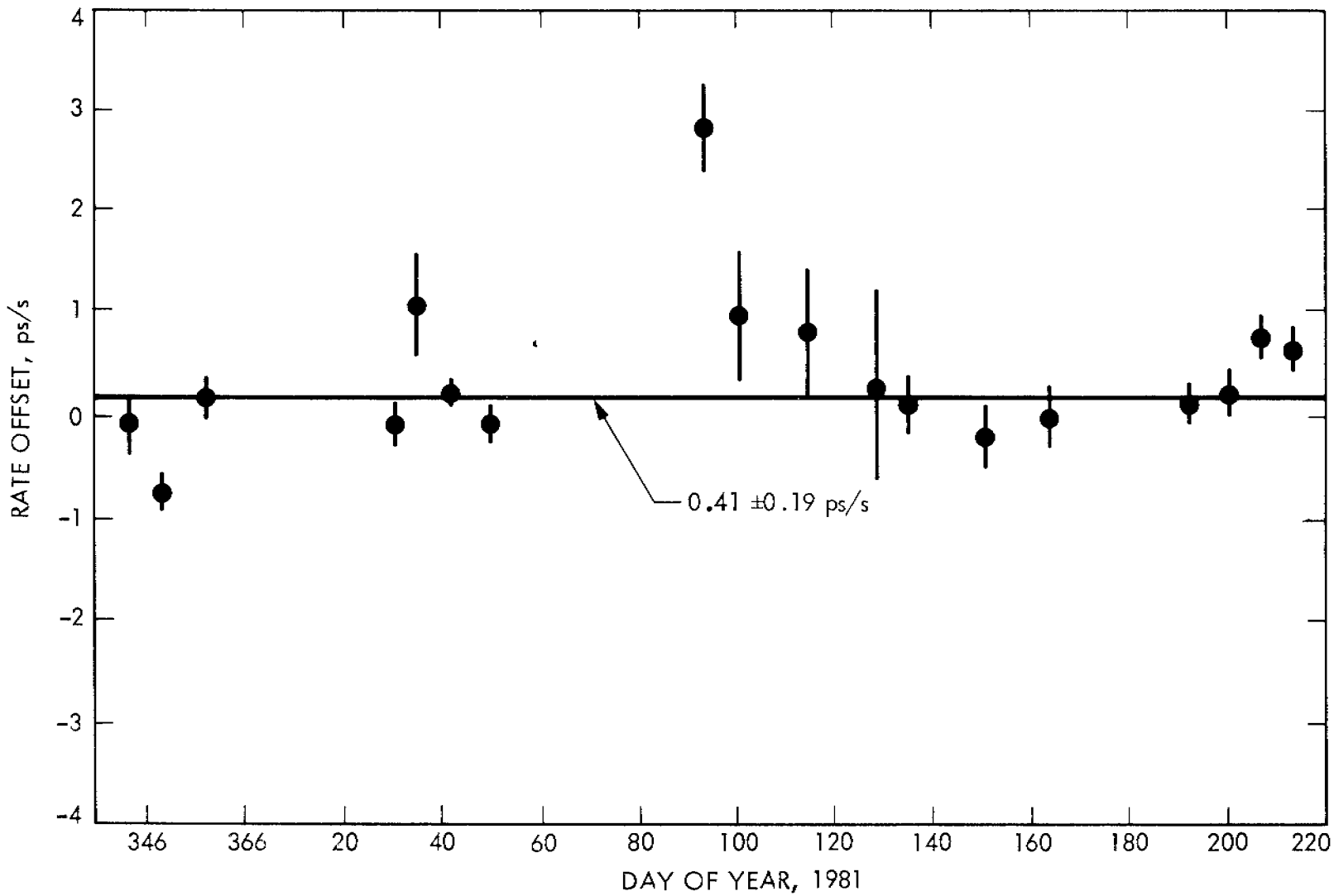

Figure 5. DSS 43-DSS 14 Rate Offsets

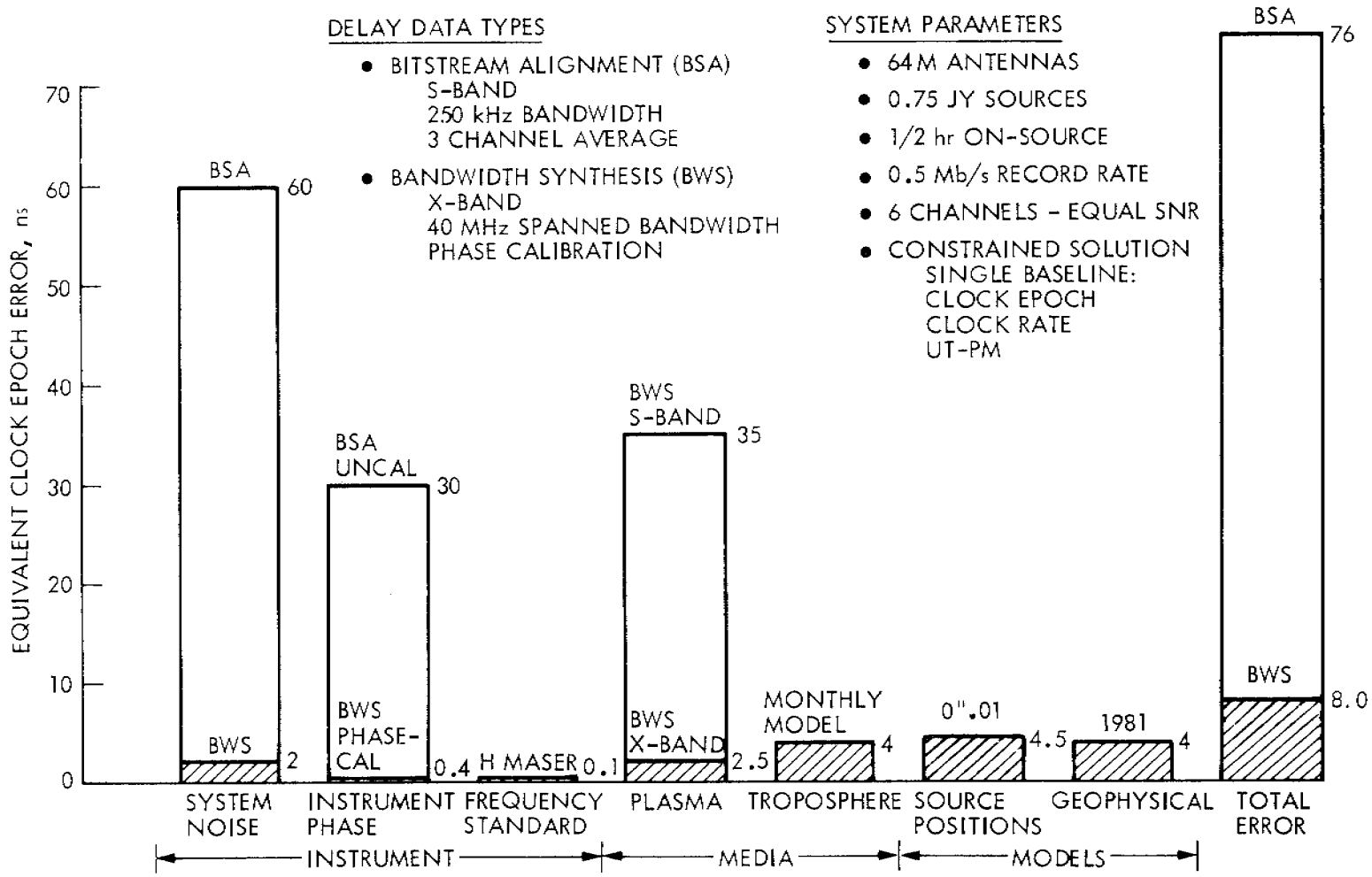

Figure 6. DSN Block I VLBI Error Sources

QUESTIONS AND ANSWERS

DR. BILL KLEPCZYNSKI, U.S. Naval Observatory

You indicated that you were using cesium for a VLBI experiment. Could I ask at what frequencies, was that an S-band, and at what sources were you looking, could you get coherence over a long enough period of time to really use the cesium?

MR. ROTH:

Well, that cesium was an emergency situation when the hydrogen maser was out of service. And this was with S-band data that I was presenting, and it seemed to work as well at X-band, but that might be a better question to address to Sam Ward.

MR. WARD:

Could I answer that, please?

MR. ROTH:

Sure, okay.

MR. WARD:

As a part of the procedure when a maser is being serviced or repaired. Prior to taking it down, we set the cesium as close as possible to the maser offset and we use our best cesium when we do this, and so far no user has been able to detect the difference.

QUESTION FROM THE AUDIENCE:

Well, how long a time do you integrate for your observation time, 10 minutes or shorter?

MR. ROTH:

There are 10 observations, each of 200 seconds.

QUESTION FROM THE AUDIENCE:

Okay. 200 seconds.

MR. ALLAN:

I might comment in regard to the long term comparisons again. The same problem that we saw in the NRL data, that when you do an RMS of the time residuals around the linear of these squares, that really isn't a very good measure. It doesn't tell you much. It is dependent upon the data length, and it doesn't tell you really much about the propagation or the instrumentation. It's usually a function of the clock and how long you measure it. It really isn't a very good measure.

So, what I am saying is: I would discourgae the use of that. I think there are better ways to characterize long term performance sometimes called the Allan variance.

MR. ROTH:

It will be there in our next report.