UNPRECEDENTED SYNTONIZATION AND SYNCHRONIZATION ACCURACY VIA SIMULTANEOUS VIEWING WITH GPS RECEIVERS; CONSTRUCTION CHARACTERISTICS OF AN NBS/GPS RECEIVER

Dick D. Davis, Marc Weiss, Alvin Clements, and David W. Allan
Time and Frequency Division
National Bureau of Standards

ABSTRACT

The NBS/GPS receiver has been designed around the concept of obtaining high accuracy, low cost time and frequency comparisons between remote frequency standards and clocks with the intent to aid international time and frequency coordination. The receiver has been tested by simultaneous viewing of the GPS satellites with the USNO GPS receiver as well as by several individual tests. The simultaneous viewing yielded syntonization accuracies of the order of parts in 10E15 over about a two-week average. Using a May '81 portable clock trip to calibrate the differential delay between the NBS and the USNO GPS receivers, July and August '81 portable clock trips agreed with the values given by simultaneous GPS satellite viewing between Boulder, CO and Washington, DC to better than than the 10 ns accuracy of the portable clock trips.

The hardware and software of the receiver will be detailed in the text. The receiver is fully automatic with a built in 0.1ns resolution time interval counter. A microprocessor does data processing. Satellite signal stabilities are routinely at the 5ns level for 15s averages, and the internal receiver stabilities are at the 1ns level. The second generation receiver has a built in CRT and parallel keyboard for operator interface. Serial RS232 is provided for local hardcopy (printer) and telephone modem use.

RECEIVER PHYSICAL CONSTRUCTION

The NBS/GPS receiver is housed in 3 rack mounted cabinets (plus a weather-tight case for the antenna electronics). The microprocessor, tape drive, 12.7cm(5 inch) CRT display and time interval counter are in a 17.8cm(7 inch) cabinet and the receiver and power supply are each in 13.3cm(5¼ inch) cabinets. It would be possible to fit everything except the antenna electronics into a single 17.8cm(7 inch) cabinet but access for testing would be much more difficult.

MICROPROCESSOR BLOCK DIAGRAM

Figure 1 shows the microprocessor and its interfaces to the rest of the receiver system. The microprocessor card was specially designed for this application.

Major features are:

- 4MHz Z80A Processor Chip
- 32k Dynamic Ram
- 16k EPROM
- 2k Memory Mapped Video - 16 Lines x 64 Char
- 9 x 8 Bit Parallel Ports
- 2 USARTS (1 - RS232, 1 - Tape Drive)
- 24 Strobe Lines

Operator interface to the system is through a parallel keyboard and menu driven video display, a 12.7cm(5 inch) CRT is included in the processor box, with BNC out for an external TV monitor.

A micro-cassette tape drive is included for saving and loading (programs, tracking schedules and almanacs.)

An RS-232 interface is provided for connecting to a telephone modem to exchange tracking data.

A hard copy output is provided for printing tracking data and plots of satellite azmuth and elevation angle (AZ-EL) viewing times for any location and date.

A time interval counter card (ambiguity 1 sec, resolution .1ns) is included in the processor. The counter was designed for the GOES satellite system and improved for use in the GPS receiver. It is a start-stop interpolator counter with 5 MHz main channel time base. The processor calibrates the interpolators before each satellite pass. Repeatability of the counter is better than 1ns.

The receiver is controlled by the processor through a 34 line ribbon cable. The cable includes 8 parallel lines from the receiver, 2 x 8 parallel lines to the receiver, 4 strobes for multiplexing data to the receiver and 1 interrupt line from the receiver.

RECEIVER BASIC FREQUENCY PLAN

The NBS receiver frequency plan is illustrated in Fig. 2. The receiver utilizes triple conversion, with the first IF at 75.42 MHz. This IF is wide band (25 MHz - 150 MHz) and provides about 50 to 55 dB of net gain. The correlation mixer converts the IF to 10.7 MHz. The post-correlation bandwidth is set by a 12 kHz crystal filter. The 10.7 MHz IF gain of 0 to 30 dB is controlled by the microprocessor during lock-up and by coherent AGC after lockup. The third IF of 700 kHz was chosen for ease of implementation of the phase coherent detectors using CMOS switches. Approximately 40dB of gain is provided in the 700 kHz IF. By limiting gain at each IF to less than 60 dB, we minimize stability problems. With this selection of IF frequencies we have no problems with carrier false lock due to spurious frequency interference.

CORRELATION LOOP

The correlation loop is an early-late (± ½ chip) non-coherent type. The locally generated clear access (C/A) sequence bi-phase modulates 86.12 MHz from the carrier loop. The resultant signal is applied to the correlation mixer and, if the local and received sequences are aligned, the resultant 10.7 MHz IF out contains only the bi-phase (50Hz) data transitions (of course, with the early-late dither of the local code, one-half of each code chip is lost). Servo error voltage is obtained from the envelope detector during initial lock and from the in phase coherent detector through a 1 ms delay sampler when locked. Correlation loop bandwidth is set to 3 Hz during acquisition and 1 Hz while tracking.

CARRIER LOOP

The carrier loop operates as a frequency synthesizer during correlation loop acquisition and a Costas loop when tracking. The companion microprocessor computes the expected Doppler from almanac data and sets the carrier synthesizer accordingly. Range is ± 4800 Hz, in 400 Hz steps. The carrier synthesizer will therefore be within ±200 Hz of the carrier center frequency when the track mode is initiated. Carrier acquisition follows within one second.

DETAILED RECEIVER BLOCK DIAGRAMS

Figures 3 and 4 show more detailed diagrams of the receiver and indicate the functions in the receiver that are controlled by the microprocessor.

SOFTWARE

In this implementation of a GPS receiver, a single Z80A processor handles all the real time concurrent tasks of receiver control, satellite message acquisition, and control of a time interval counter making a pseudo range measurement each second. Without an interruption of any of the above functions, the processor computes a least squares quadratic fit of the pseudo range measurements each 15 seconds, evaluates the estimate at its mid-point, computes the slant range to the satellite at the time corresponding to the mid-point fit and arrives at a value for the local clock time minus the space vehicle clock time (LOCAL-SV) and LOCAL-GPS, where "GPS" denotes SV time plus the GPS computed SV clock correction. Each data point is displayed on the video display and is stored in memory for processing immediately after the end of the SV track time. The receiver is always responsive to the local keyboard interface and the RS-232 modem interface, even while tracking and processing data, thus allowing easy communication with the user. (We should note that 5 of the 8 interrupt driven programs are dedicated to making the machine friendly.)

For example, the operator can command the processor to erase an old almanac tape and write a new tape of the almanac that has just been collected while the unit is still tracking. The menu driven operator interface will even allow the operator to generate a 24 hour graph of satellite elevation/azimuth for any location and any date while the unit is tracking and collecting data. (The graph is limited to a maximum of 5 satellites at a time and is output to the printer).

All of these capabilities are made possible by a unique interrupt implementation. A total of 8 vectored interrupts are utilized:

Priority	Interrupt Rate	Function
1	50 Hz/1kHz	Control Receiver, collect serial satellite data
2	75Hz/200Hz	Read/write tape files
3	150 Hz	Receiver RS-232 data
4	100 Hz	Format video display
5	30 HZ	Make counter measurements (pseudo range)
6	30 Hz	Read KBD input, display on screen
7	150 Hz	Transmit/format RS-232 data
8	1 Hz	Run real time UTC clock

When an interrupt is taken, a complete context switch takes place, much as in a large time share system. This context switch requires about 70μs for each interrupt taken but the advantage is that the

interrupt driven program is written "in line" rather than having the same entry point each time an interrupt is taken. Each interrupt driven program is analgous to a program running on a time share system with one exception: on the time share system the central processor assigns a "time slice" to a single user and at the end of that time (say 10 milliseconds) the user's program is stopped and another user's program is taken up where it left off and is run for a few more milliseconds. The user is unaware of these "time slice" allocations and from his perspective, his program runs continously to completion (unless the system is overloaded).

In our implementation the interrupt driven program's "time slice" starts when the interrupt is taken. The program continues to execute until the instruction "CALL INTERRUPT RETURN" is executed. All registers of the interrupt driven program are stored and the machine returns to the main program. When the next interrupt is taken, execution continues with the instruction following "CALL INTERRUPT RETURN", with all registers and status restored. The interrupt driven programs have been written so that no more than 500μs elapses before a "CALL INTERRUPT RETURN" is executed. All of the interrupt driven programs together utilize 5 to 15% of the total processor time.

With this introduction, we will examine the interactions of the MAIN (interruptable) program and the three interrupt driven programs that are responsible for locking to and tracking the satellite.

A satellite tracking operation begins when the 1 HZ interrupt driven program finds a match between its current hours, minutes, and seconds (HMS) clock time and any of the 48 user programmed satellite start track times. The 1 HZ program stores the SV# and SV class bytes in a reserved 2 byte variable area and loads the "start track" command byte into the main program's 16 byte circular command buffer. At the time this happens, the Main Program, and the Receiver and Counter programs may be idle (or) may be busy tracking another satellite. If they are tracking already, the main program recognizes this and will execute sequential commands "stop track", followed by "start track".

The 1 Hz program then sets a timer to count down for 7 minutes, 58 seconds at which time it will issue a "stop track" command to the main program. The 1 Hz program continues its timekeeping function and has no further direct interaction with the lockup/track sequence.

If the machine were idle at the time the 1 Hz program issued "start track", the main program would immediately vector to the start track program. It would first pick up the SV# and through a lookup table, set the proper C/A code into the receiver PN generator. It then sets the carrier loop synthesizer in the receiver to center frequency. Next, it picks up the binary almanac for the proper SV and converts it

to floating point decimal format. It then picks up an image of the UTC clock and computes the slant range to the satellite. It then increments the time of the UTC clock image by 100s and computes a second value of slant range to the satellite. From these 2 computations of slant range, it determines the expected carrier Doppler and sets the carrier synthesizer to the correct value.

At this point, the program is approximately 2 seconds into the lockup sequence. The main program now sets a flag to signal the receiver program to exit its idle loop and begin its lockup sequence. The main program continues on to the "calibrate counter routine" which will require approximately 8 seconds to complete. After the counter is calibrated, the main program returns to its idle loop. While the main program is calibrating the counter, the receiver program begins the receiver lockup sequence.

The amount of time required for the receiver program to lock up and find the HANDOVER WORD (HOW) in the SV data stream can vary from a minimum of 10 seconds to a maximum of 50 seconds, with the mediam being 30 seconds. At this point, the receiver program again needs the services of the main program to convert the binary HOW into DAY, HH, MM, SS and GPS seconds of the week (decimal). The receiver program issues a "Set Clock" command to the main program. The main program requires about 100 ms to set the GPS clock in the receiver. The receiver program then sets a flag to tell the counter program to exit its idle loop and start making a pseudo range measurement each second. The pseudo range measurements are stored in a modulo-30-second circular buffer.

The main program returns to its idle loop to await further commands. The receiver program continues to run the GPS clock and store serial 50 Hz data from the SV. It hangs in a loop until the end of Frame 5 of the GPS data format. (The end of frame 5 will be second 00 or 30 of the GPS minute).

At the end of frame 5, the receiver program enters a 30 second loop where it will remain until the track is terminated. In this loop, it continually collects serial SV data, runs the GPS clock, and outputs 1PPS for the pseudo-range measurements. It also gives commands to the main program at the appropriate times to convert data blocks I and II and verify parity and save the almanacs contained in data block III. Each 15 seconds, it gives a command to the main program to make a measurement computation.

A measurement computation involves doing a least squares quadratic fit to 15 seconds of pseudo-range data, evaluating the mid-point estimate of the fit, computing the slant range to the SV using data block II, making the sagnac correction, computing the SV clock correction using data Block 1, and storing a value for LOCAL-SV and LOCAL-GPS. This data is also output to the video display (and) to the hard copy device

if desired. A complete measurement computation sequence executes in 2.5 seconds. The main program is busy about 20% - 25% of the time and is in the idle loop the rest of the time.

The track time is terminated when the 1 Hz program timer counts down and the 1Hz program issues a "stop track" command to the main program. The main program forces the receiver program into a 1 second sequenced stop routine and sets a flag to signal the counter program to return to its idle loop when it completes its current measurement.

The main program then does a least squares linear fit on the 15 second data points for LOCAL-SV and LOCAL-GPS. It then stores the intercepts and slopes, along with the SV#, Ref time at beginning of track, AZ/EL at the end of the track, data age of DB II, and sigma for the fits. It then searches through all programmed track times and displays the next scheduled track time and returns to the idle loop.

The main program is by far the largest of the 9 programs running in the machine. As we have noted, it receives commands to do various functions through a 16 byte circular buffer. Up to 15 commands may be queued up at one time before the system blows up. Normally no more than 3 or 4 commands will be queued in the buffer. At present, a total of 18 different commands are executed by the main program, but this number will ultimately grow to the mid twenties when all the planned functions are added. All precise arithmetic functions are handled through a 15 decimal digit floating point package with hex interpreter, especially developed for this system. The floating point package occupies about 2K bytes.

All of the interrupt driven programs not discussed until now are concerned with input/output operations. The tape program reads and writes tape files. These may be data such as almanacs and track times or the "personalized" program that has the receiver coordinates for a particular location. The two RS-232 programs are concerned with communications over a telephone modem, and the video and keyboard programs provide the local operator interface.

The complete software package will approach 32 K bytes of machine language code, with 16K of firmware and display formatting in EPROM and 16K of program in RAM to be loaded from tape.

Common View Data Analysis Results

As has been shown [1] one of the main advantages of the GPS in common -view approach is the cancellation of errors that are common in both legs of the viewing path when the same GPS satellite is viewed simultaneously. Therfore, the only errors in the time and frequency measurements between two remote sites are due to changes in the differential delays. The following analysis is an effort to characterize

the limitations of using GPS satellites in common-view measurements taken simultaneously at the U. S. Naval Observatory in Washington, DC with its GPS receiver and with the NBS constructed receiver located in Boulder, CO (a baseline of about 3,000 kilometers). We began collecting data using this mode on the 31st of May 1981 and performed the analysis over the period of June, July, August and September of '81. Three portable clock trips were made during this period and nearly daily values were taken on NAVSTAR satellites 3, 4, 5 and 6 which correspond to space vehicle (SV) 6, 8, 5 and 9 respectively. We agreed with USNO to measure at relatively high elevation angles after upload of the SV clock and ephemeris parameters from Vandenburg Air Force Base occurs; we also agreed to change the time once a week about 28 minutes to correspond with the movement of the ephermeris. Thus the satellites were viewed at nominally constant azimuth and elevation angles at each of the two sites. The USNO receiver applies ionospheric and tropospheric corrections. The NBS receiver collects the correction data, but the corrections were not applied. The viewing time for the constellation of the above four satellites moved from nominally midnight on the 31st of May to late morning for the September data--the data being taken over about a three-hour period for the four satellites. This moved the viewing through a significantly different period in the ionospheric profile--going from midnight delays to daytime delays. The coordinates of USNO and NBS used were 38° 55' 13.503" North Latitude, 282° 56' 0.151" East Longitude, + 47.68m elevation and 39° 59' 43.6220" North Latitude, 254° 44' 15.569" East Longitude, 1663.3m elevation respectively. Both sites are about the same latitude, which would make the differential delay in the ionosphere about the same.

The short-term stability has been analyzed in a previous paper [2]. Fig. 5, is a review of that stability showing the short-term white phase noise characteristics of the apparent propagation fluctuations from the satellite through the receiver, to the reference clock on the ground. If the white phase noise shown in Fig. 5 were the only limiting noise, the mean value of an 8 to 10 minute data set would have an uncertainty of less than one nanosecond. However, when we analyze the day-to-day fluctuations, they were of the order of 10 nanoseconds rms, which indicates that there is another random noise driving mechanism on the day-to-day fluctuations. A possible mechanism is the daily uncertainties in the ephemeris. Fortunately, in the common-view approach, the clock error goes to zero, and the ephemeris error is significantly reduced from the actual error realized in a navigation solution. Fig. 6 is a plot via the common-view approach of UTC(USNO) provisional-UTC(NBS) over the four-month period mentioned with a mean frequency of 1.2×10^{-13} removed. The circles indicate the three portable clock trips made during this period. The first clock trip was simply used to calibrate the differential delay between the USNO and NBS receivers and amounted to 335 nanoseconds. The remaining two trips used that as a calibration value assuming it would remain con-

stant. The values were compared against quadratic least-squares fits to the data over the period in which the clock trip was taken. The portable clock values agreed to within three nanoseconds and two nanoseconds respectively of the estimated GPS measures of the USNO-NBS time difference. The uncertainties on the portable clock trips were at least 10 nanoseconds. The excellent agreement may be somewhat fortuitous, but is very encouraging. The four months of data were broken up into ten-day segments where continuous data were available. For each ten-day segment and for each of the space behicles (SV6, 8, 5, and 9) NAVSTAR 3, 4, 5, and 6 respectively a linear-least-squares (LLS) fit to the USNO-NBS clock time differences was calculated. Each LLS fit gave an intercept and a slope. The consistancy of these intercepts and slopes are a measure of the synchronization and syntonization accuracies respectively taken across the 4 satellites and as a time series given the ten-day average. Taken as a time series the uncertainty on the LLS fit for a single satellite was 4.7 nanoseconds and averaged across the four satellites was 2.2 nanoseconds. The uncertainty on the slope from a single satellite for the ten-day average was about 0.7 nanoseconds per day and averaged across the four satellites was 0.3 nanoseconds per day. A slight asymmetry in the intercept values was observed that seemed consistent from one ten-day interval to the next and amounted to a peak-to-peak of about seven nanoseconds which would indicate possibly an error in the coordinates at one or both of the sites.

Figure 7 shows a frequency stability analysis using modified $\sigma_y(\tau)$ versus the sampling time [3] . The shaded area represents range of performance of the state-of-the-art standards that are currently being studied in various timing centers. The square blocks are stability measures for Loran-C taken over the last year for comparison purposes. The circles with the x in the middle are the frequency stability analysis of the data shown in Fig. 7 for the comparisons of the time scales UTC(USNO) versus UTC(NBS). The circles with the dots in the middle are estimates of the GPS measurement limit from the previous ten-day analysis. The one-day, two-day and ten-day values were calculated by measuring the same thing with the four satellites--UTC(USNO)-UTC(NBS). It is interesting that the measures seem to follow a $\tau^{-3/2}$ behavior, which would indicate white phase noise again, but at a higher level. There are no apparent indications of systematics for sample times out to ten-days, which allows us to have an incredible frequency comparison capability over ten-day samples of about three parts in 10^{15}. It then becomes apparent that at the ten-day averaging time the GPS in common-view is about a factor of 26 times better that is Loran-C for the Washington, Boulder path. It is also interesting to note that for sample times of the order of four -days and longer, the instabilities of two of the best clock ensembles in the world are measurable using the GPS in common-view approach.

CONCLUSION

The NBS developed GPS(C/A) receiver features hardware which has an intrinsic time stability of about 1ns when locking on to a GPS satellite signal. The Z80 based microprocessor software is very powerful, versatile, and friendly--with the ability to calibrate an internal 0.1 ns time interval counter as one of its many tasks. The design and parts selection for the receiver have been chosen to minimize cost and to maximize stability and reliability.

The receiver is also designed to be accessed through a modem so that it's data can be readily compared with receiver data taken simultaneously at a remote site, which is in common-view of the same satellite. Preliminary tests of this technique between Boulder CO and Washington D.C. indicate the ability to do accurate time transfer to better that 10 ns, and frequency measurements to better than 1 part in 10^{14}.

Because the GPS satellites orbit at about 4.2 earth radii and most of the T/F standards laboratories are at fairly high latitudes, the simultaneous common-view approach has the potential of working well for international time and frequency metrology. Experiments are planned to test these techniques internationally.

ACKNOWLEDGEMENTS

The authors are deeply appreciative of the cooperation of the staff of the USNO. Also we wish to thank Mr. Roger Beehler and Professor Neil Ashby for their careful reading and comments on the paper. We are also grateful for the support of our sponsors: Air Force Space Division, Jet Propulsion Laboratories, Navy Metrology Engineering Center, and Naval Air Logistics Center. Without their support this project would most probably never have come to fruition.

REFERENCES

[1] D. Allan and M. Weiss, Accurate Time and Frequency Transfer During Common-View of a GPS Satellite, Proc. 34th Annual Symp. on Frequency Control (SFC), 334 (1980).

[2] Davis. et. al., Construction and Performance Characteristics of a Prototype NBS/GPS Receiver, Proc. 35th Annual Symposium on Frequency Control (SFC) 1981.

[3] D. Allan and J. Barnes, A Modified "Allan Variance" with Increased Oscillator Characterization Ability, Proc. 35th Annual Symposium on Frequency Control (SFC) 1981.

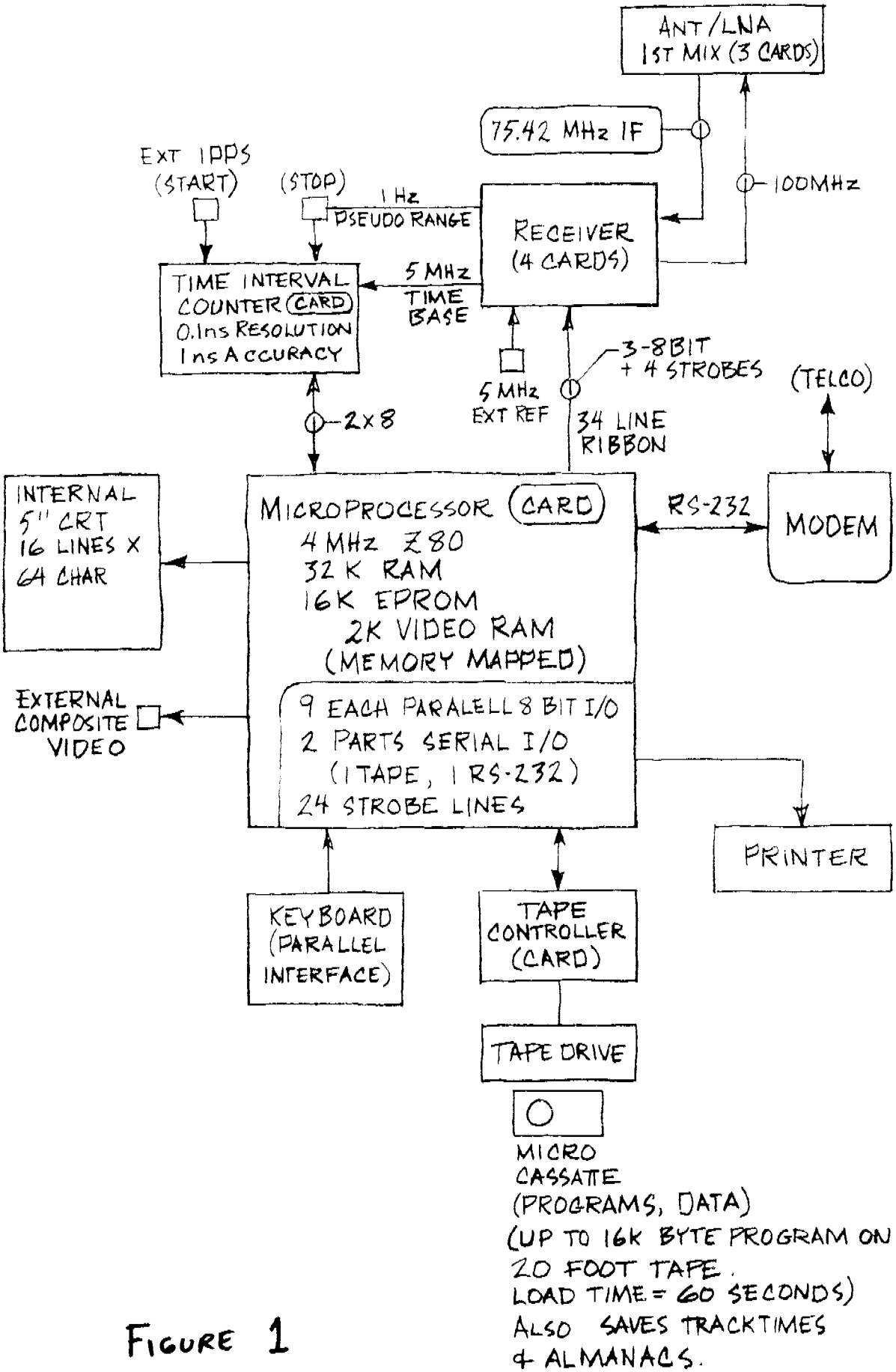
ANT/LNA
1ST MIX (3 CARDS)
75.42 MHz IF
100MHz
EXT 1PPS
(START)
(STOP)
1 Hz
PSEUDO RANGE
RECEIVER
(4 CARDS)
TIME INTERVAL
COUNTER (CARD)
0.1ns RESOLUTION
1ns ACCURACY
5 MHz
TIME
BASE
5 MHz
EXT REF
3-8BIT
+ 4 STROBES
(TELCO)
2x8
34 LINE
RIBBON
INTERNAL
5" CRT
16 LINES X
64 CHAR
MICROPROCESSOR (CARD)
4 MHz Z80
32 K RAM
16K EPROM
2K VIDEO RAM
(MEMORY MAPPED)
RS-232
MODEM
EXTERNAL
COMPOSITE
VIDEO
9 EACH PARALELL 8 BIT I/O
2 PARTS SERIAL I/O
(1 TAPE, 1 RS-232)
24 STROBE LINES
PRINTER
KEYBOARD
(PARALLEL
INTERFACE)
TAPE
CONTROLLER
(CARD)
TAPE DRIVE
MICRO
CASSATTE
(PROGRAMS, DATA)
(UP TO 16K BYTE PROGRAM ON
20 FOOT TAPE.
LOAD TIME = 60 SECONDS)
ALSO SAVES TRACKTIMES
& ALMANACS.

FIGURE 1

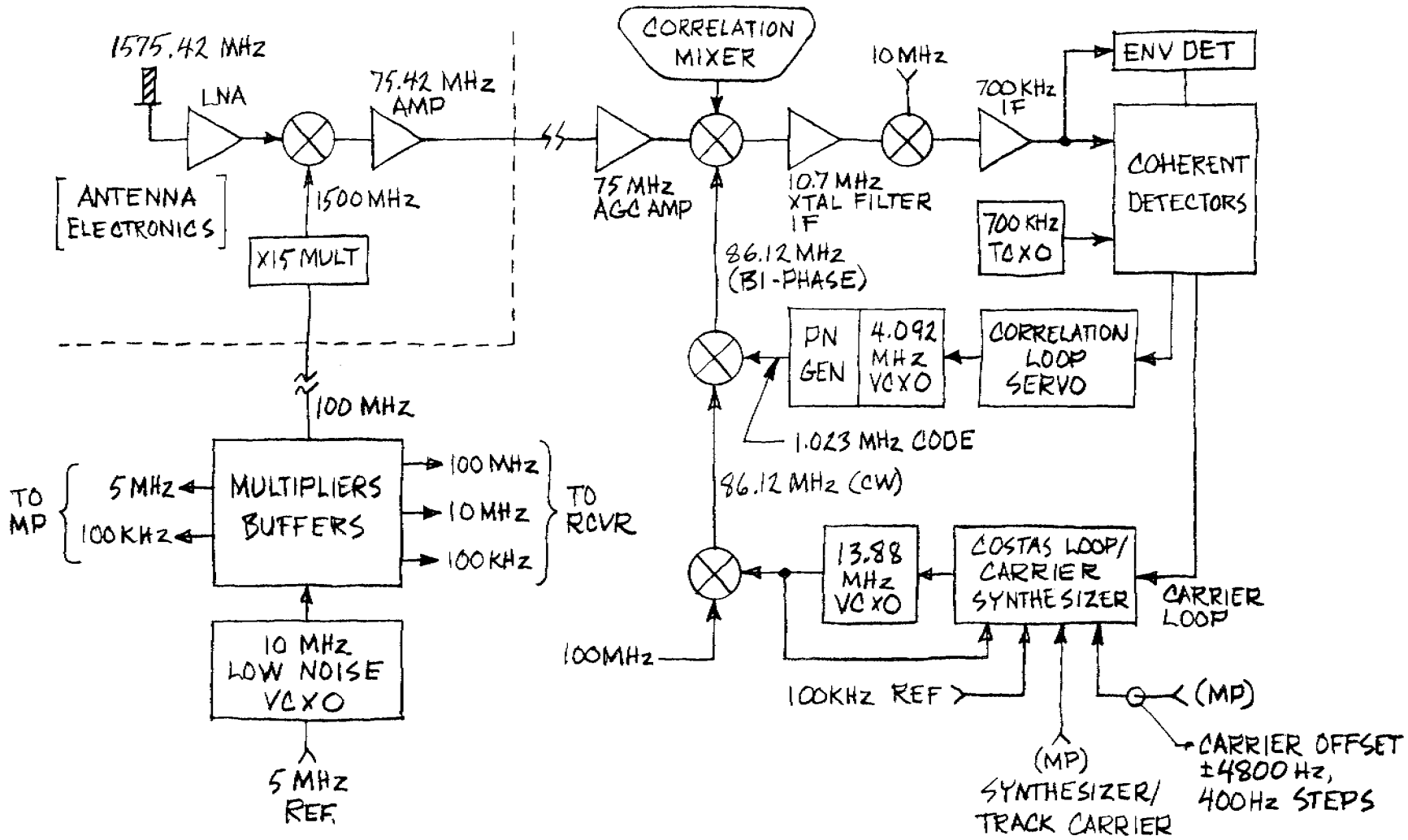
1575.42 MHz
LNA
75.42 MHz AMP
ANTENNA ELECTRONICS
1500 MHz
X15 MULT
100 MHz
TO MP
5 MHz
100 KHz
MULTIPLIERS BUFFERS
100 MHz
10 MHz
100 KHz
TO RCVR
10 MHz LOW NOISE VCXO
5 MHz REF.
CORRELATION MIXER
75 MHz AGC AMP
10 MHz
10.7 MHz XTAL FILTER IF
700 KHz IF
ENV DET
COHERENT DETECTORS
700 KHz TCXO
86.12 MHz (BI-PHASE)
PN GEN
4.092 MHz VCXO
CORRELATION LOOP SERVO
1.023 MHz CODE
86.12 MHz (CW)
13.88 MHz VCXO
COSTAS LOOP/ CARRIER SYNTHESIZER
CARRIER LOOP
100MHz
100KHz REF
(MP)
(MP) SYNTHESIZER/ TRACK CARRIER
CARRIER OFFSET ±4800 Hz, 400Hz STEPS

FIGURE 2

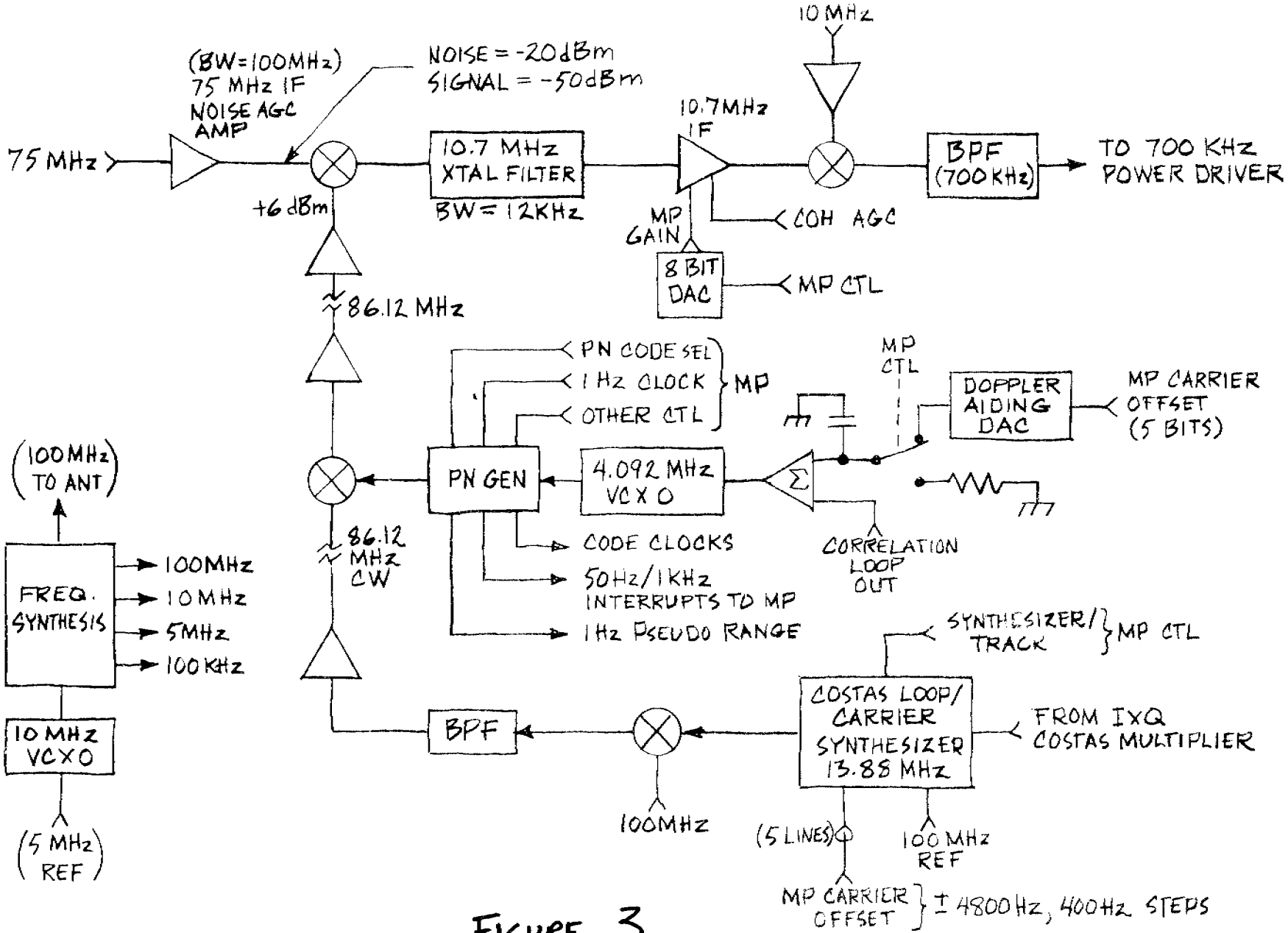
75 MHz
(BW=100MHz)
75 MHz IF
NOISE AGC
AMP
NOISE = -20dBm
SIGNAL = -50dBm
+6 dBm
10.7 MHz
XTAL FILTER
BW = 12KHz
10.7MHz
IF
MP
GAIN
8 BIT
DAC
MP CTL
COH AGC
10 MHz
BPF
(700KHz)
TO 700 KHz
POWER DRIVER
86.12 MHz
PN CODE SEL
1 Hz CLOCK
OTHER CTL
MP
MP
CTL
DOPPLER
AIDING
DAC
MP CARRIER
OFFSET
(5 BITS)
PN GEN
4.092 MHz
VCXO
Σ
CORRELATION
LOOP
OUT
CODE CLOCKS
50Hz/1KHz
INTERRUPTS TO MP
1 Hz PSEUDO RANGE
86.12
MHz
CW
(100MHz
TO ANT)
FREQ.
SYNTHESIS
100MHz
10 MHz
5MHz
100 KHz
10 MHz
VCXO
(5 MHz
REF)
SYNTHESIZER/
TRACK
MP CTL
COSTAS LOOP/
CARRIER
SYNTHESIZER
13.88 MHz
FROM IXQ
COSTAS MULTIPLIER
BPF
100MHz
(5 LINES)
100 MHz
REF
MP CARRIER
OFFSET
± 4800 Hz, 400 Hz STEPS

FIGURE 3

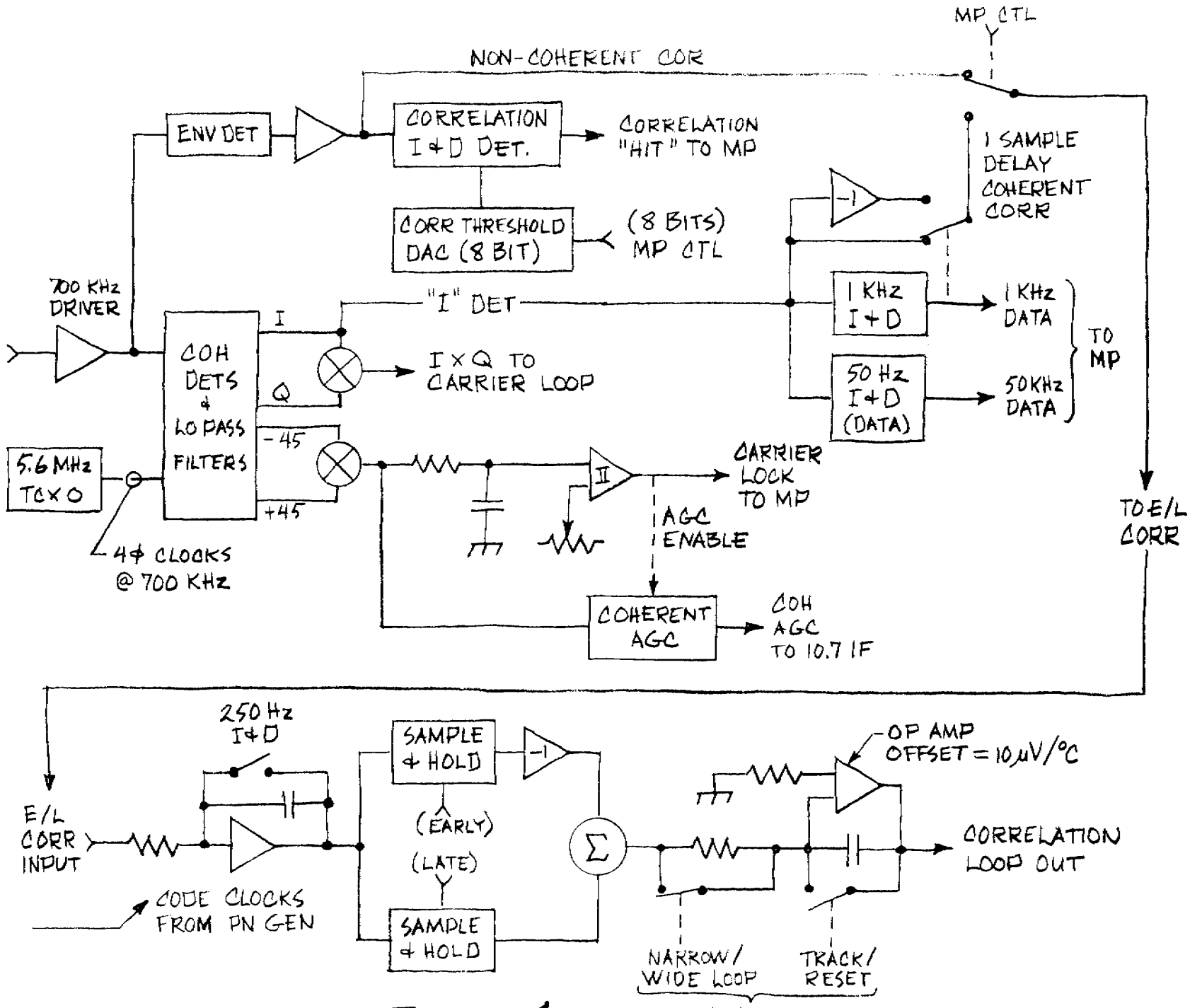
MP CTL
NON-COHERENT COR
ENV DET
CORRELATION I & D DET.
CORRELATION "HIT" TO MP
CORR THRESHOLD DAC (8 BIT)
(8 BITS) MP CTL
1 SAMPLE DELAY COHERENT CORR
-1
700 KHz DRIVER
COH DETS & LO PASS FILTERS
I
Q
-45
+45
"I" DET
I × Q TO CARRIER LOOP
1 KHz I & D
1 KHz DATA
50 Hz I & D (DATA)
50 KHz DATA
TO MP
5.6 MHz TCXO
4φ CLOCKS @ 700 KHz
CARRIER LOCK TO MP
AGC ENABLE
COHERENT AGC
COH AGC TO 10.7 IF
TO E/L CORR
250 Hz I & D
E/L CORR INPUT
CODE CLOCKS FROM PN GEN
SAMPLE & HOLD
(EARLY)
(LATE)
SAMPLE & HOLD
Σ
OP AMP OFFSET = 10 μV/°C
CORRELATION LOOP OUT
NARROW/ WIDE LOOP
TRACK/ RESET
MP CTL

FIGURE 4

FIGURE 5

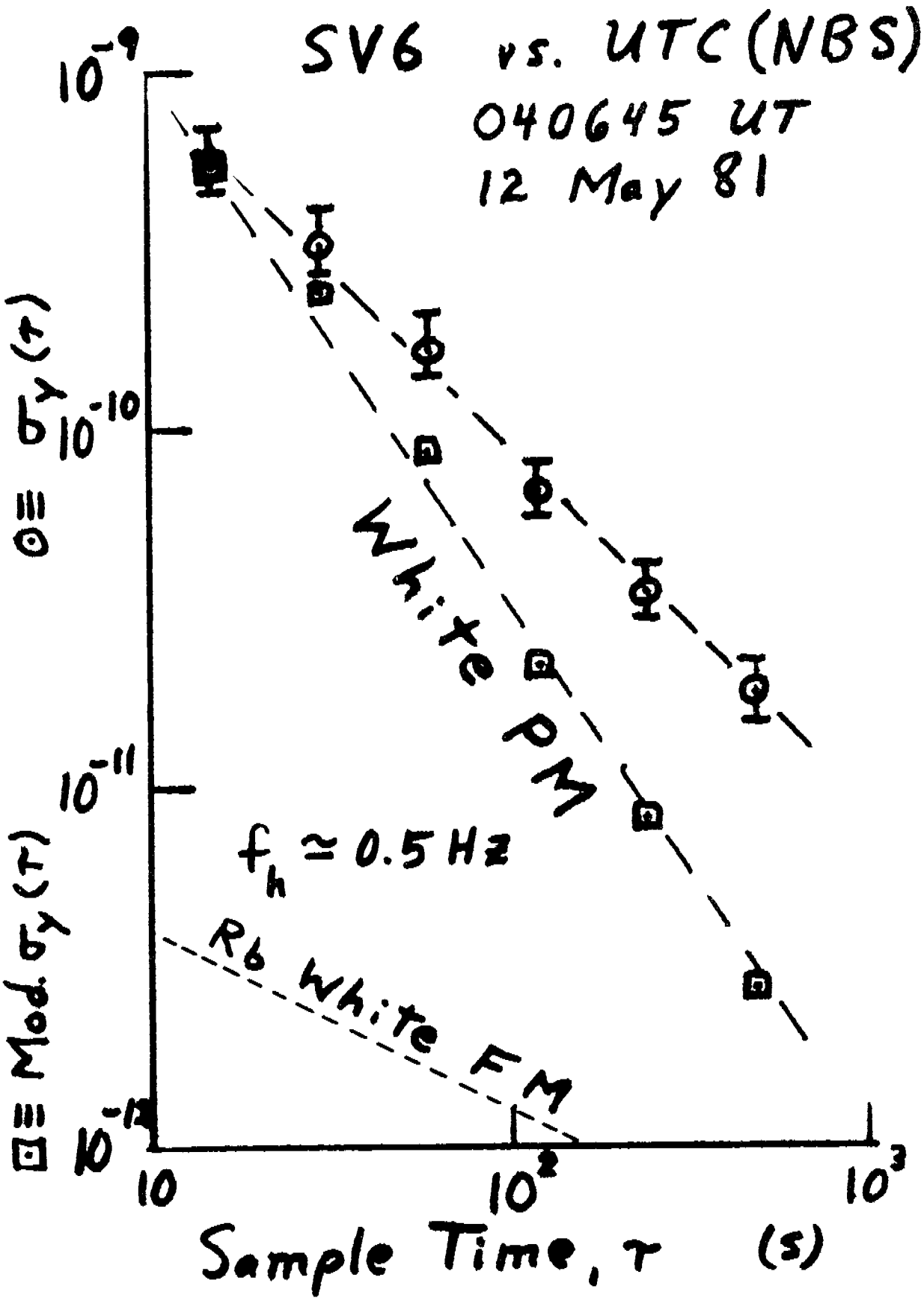
SV6 vs. UTC(NBS)
040645 UT
12 May 81
10^{-9}
10^{-10}
10^{-11}
10^{-12}
⊙ ≡ $\sigma_y(\tau)$
⊡ ≡ Mod. $\sigma_y(\tau)$
White PM
$f_h \simeq 0.5$ Hz
Rb White FM
10
10^2
10^3
Sample Time, τ (s)

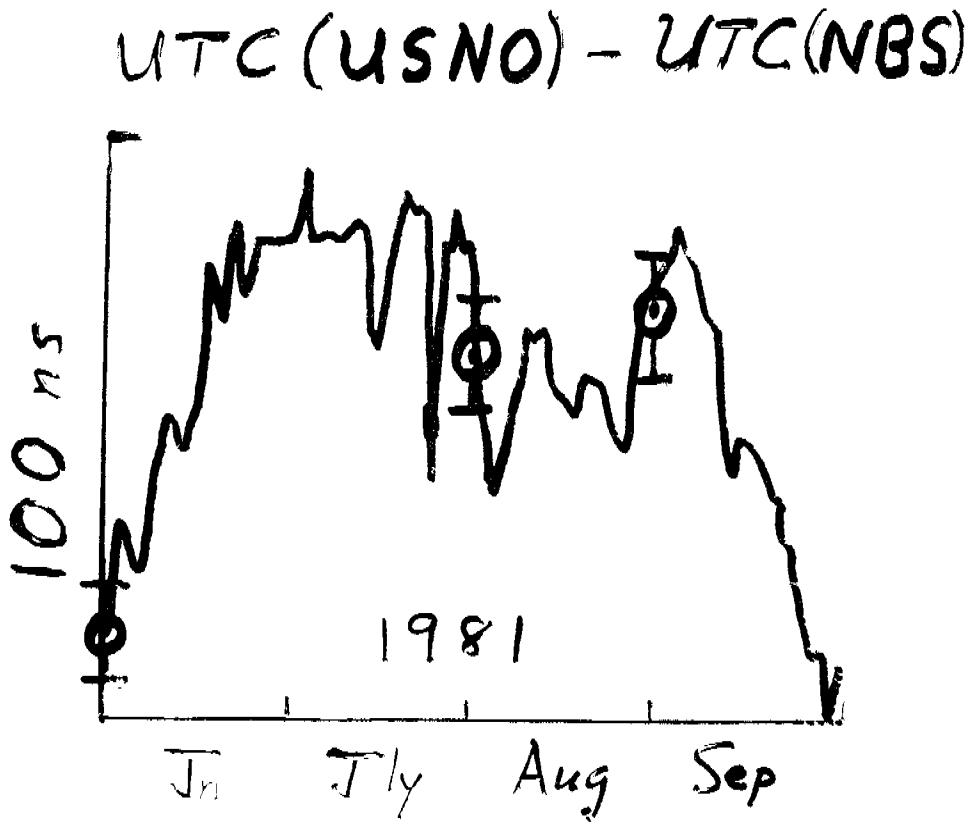

FIGURE 6

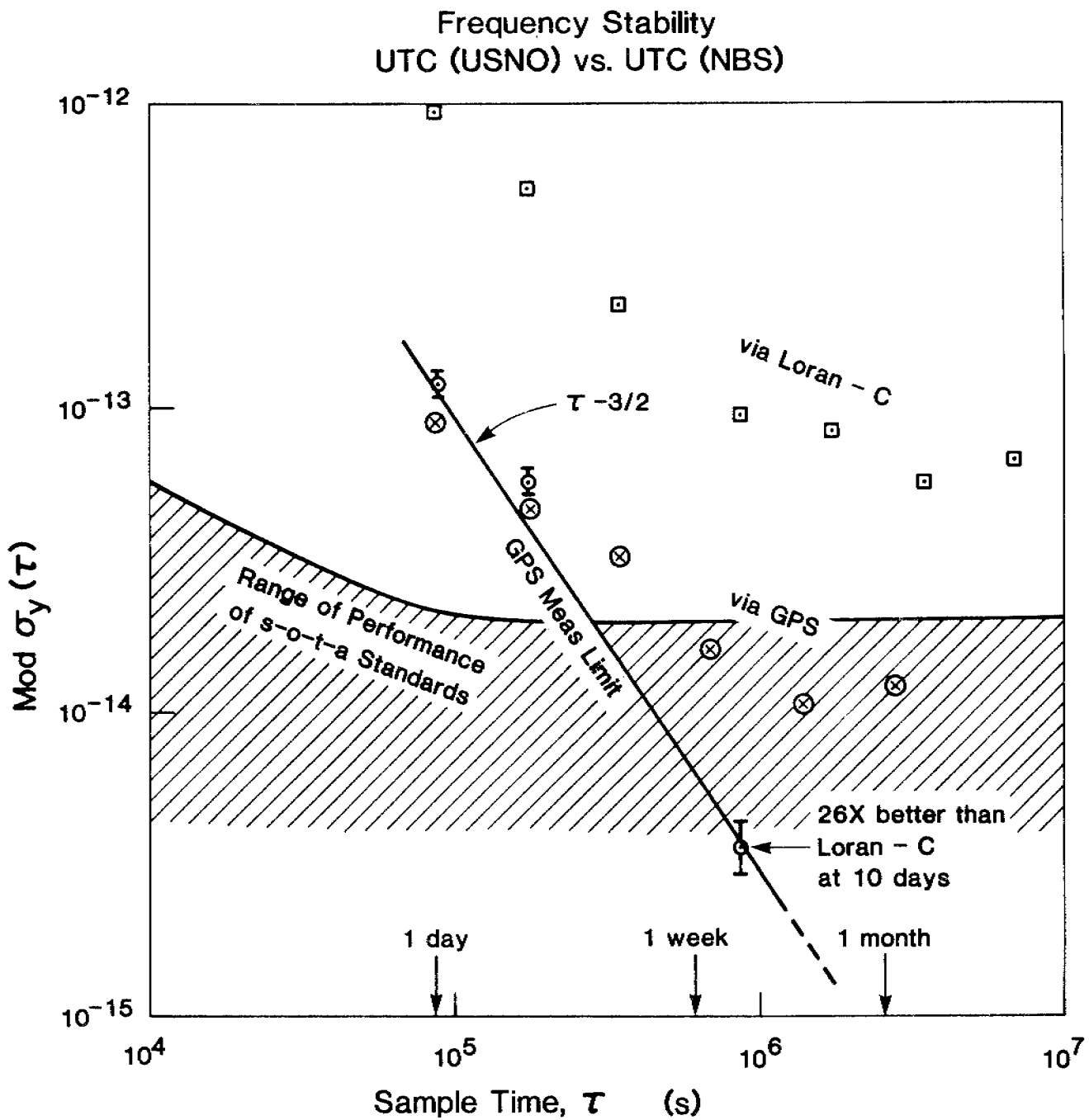
Frequency Stability
UTC (USNO) vs. UTC (NBS)
10^{-12}
10^{-13}
10^{-14}
10^{-15}
Mod $\sigma_y(\tau)$
10^4
10^5
10^6
10^7
Sample Time, τ (s)
$\tau^{-3/2}$
via Loran - C
via GPS
GPS Meas Limit
Range of Performance
of s-o-t-a Standards
26X better than
Loran - C
at 10 days
1 day
1 week
1 month

FIGURE 7

QUESTIONS AND ANSWERS

MR. BOB VAN WECHEL, Interstate Electronics

I had one question on your picture of the receiver with the antenna. It looked, at a quick glance, like the mixer was right on the antenna and there wasn't a pre-amp, or did I see wrong there?

MR. ALLAN:

There is a low-noise amplifier. A 40 dB low-noise amplifier immediately following the antenna, and then it goes through a very broad band seven pole filter. It's very flat over about 70 megahertz.

QUESTION FROM THE AUDIENCE:

I'd like to ask what type of ionospheric calibration, if any, were you using? How badly would the effects of different ionosphere degrade on intercontinental distances, say, Goldstone, Canberra, that type of thing?

MR. ALLAN:

It is a very, very good question. We don't know the answer. All we can do is calculate some numbers, and it looks like internationally we can from the results over this path 3,000 kilometered base-line, USNO/NBS, we would estimate we could probably do 10 nanoseconds dealing with the ionosphere models that we have.