RECENT DEVELOPMENTS AND PROPOSED SCHEMES FOR TRAPPED ION FREQUENCY STANDARDS

L. Maleki
Jet Propulsion Laboratory
California Institute of Technology
Pasadena, California

ABSTRACT

Ion traps are exciting candidates as future precision frequency sources. Recent developments have demonstrated that mercury ion frequency standards are capable of a stability performance comparable to commercial cesium standards. Novel schemes proposed recently may prove promising for the improvement of the frequency stability of ion traps. In this paper we will discuss new developments and prospects of proposed schemes currently under investigation for the achievement of this goal. Possible difficulties that new schemes may encounter will also be discussed.

Introduction

Since 1966 when Dehmelt and co-workers first proposed the application of ion traps for the development of a frequency standard[1], there has been considerable effort in various laboratories in the US and abroad to achieve this objective. The intrinsic properties of trapped ions, namely, their isolation and relative insensitivity to environmental influences, makes them ideally suited for application as a frequency standard. Ions with appropriate electronic energy level structure may be contained for relatively long periods of time, and interrogated spectroscopically with little perturbations. In this way it is possible to utilize suitable electronic transitions in ions to establish a precision frequency source.

The development of a trapped ion microwave frequency standard was first attempted by Major[2], who investigated the feasibility of this concept with ^{199}HgII contained in an rf trap. A microwave-optical double resonance method was then utilized by Major and Werth[3] to determine the

magnetic hyperfine spectrum of this ion. Since then, various attempts at NBS and Hewlett Packard in the US, Universities of Mainz and Heidelberg in Germany, and the University of Paris-Sud in France have been successful in determining hyperfine structure of a number of ion systems with the utilization of ion traps. While all this work contributed both directly and indirectly to the development of trapped ion frequency standards, it was only recently that Audoin and co-workers in France constructed an operational trapped mercury ion microwave standard and investigated its performance[4].

At JPL there has been continued interest in the development of advanced frequency standards in connection with various applications in navigation, communications, VLBI, and other related areas. A study was therefore initiated in 1979 to evaluate the usefulness of a trapped ion frequency standard in meeting the present and future requirements for the application mentioned above. This study resulted in the establishment of an effort, presently under way, to develop a trapped ion microwave frequency standard. In this paper some salient features of trapped ion frequency standards will be discussed, and some areas which might challenge the development will be identified. An attempt will be made to indicate possible approaches to overcome the difficulties and facilitate further development of trapped ion frequency standards.

JPL Study

Based on our study at JPL, we determined that trapped ion frequency standards offered a unique potential for two diverse areas of application. Because of their relatively small size and low power consumption, the development of a trapped ion standard capable of performance similar to that of the cesium standard will be particularly useful for application as on-board standards in space crafts. Such a standard would be quite attractive for use in the areas of deep space navigation and communications, as well as other near earth applications, such as Global Positioning System where a reliable, high performance on-board clock is

required. On the other hand, since trapped ion frequency standards represent a viable approach for the development of an optical frequency standard, their development for this particular application is significant and desirable. The ultimate development of a mono-ion oscillator as proposed by Dehmelt[5], can provide a significant improvement in the capability of conventional frequency standards presently in use.

While our efforts at JPL are presently aimed at the development of a trapped ion microwave frequency standard, we are also interested in the investigation of certain approaches that may aid the development of the trapped ion optical frequency standard.

Trapped Ion Microwave Frequency Standard

The 199 isotope of mercury has been the most widely used system for the development of a microwave frequency standard. The reason for the popularity of this ion system lies on the simple hyperfine structure of its ^2S ground state (F = 0 and 1), the size of the separation of the hyperfine levels (40.5 GHz) and the relatively large mass of the mercury ion. The advantage of the simplicity of the hyperfine structure is obvious. Such a hydrogenlike structure implies the attractive attribute of large number of ions participating in $\Delta m_F = 0$ transition, which has the smallest sensitivity to magnetic field variations. The size of the splitting at 40.5 GHz implies a large line Q, an important parameter for precision frequency standard applications. Finally, the relatively large mass of mercury minimizes the undesirable effects of second order Doppler broadening, which sets the limit of stability for the trapped ion standard.

The scheme employed for the use of mercury 199 in previous works has involved utilization of light from mercury 202 lamp, which has an emission line at 1942 Å. Because of the energy level structure of 202 HgII, the wavelength of this transition coincides with the wavelength required to pump $^2S_{1/2}$ (F = 1) to $^2P_{1/2}$ transition of the isotope 199 ion. The optically excited Hg 199 ions decay from the $^2P_{1/2}$ state

into both the F = 0 and F = 1 hyperfine levels. Thus, in a double resonance scheme similar to that employed in the rubidium clock, it is possible to lock a 40.5 GHz signal from an oscillator to the intensity of the fluorescence due to the $^2P_{1/2} \rightarrow {}^2S_{1/2}$ transition and establish a frequency standard. This scheme, however, suffers from an intrinsic difficulty. Since the wavelength of the pump light at 1942 Å is the same as the fluorescence, the scattering of the pump light from the trap and other surfaces produces a large background which severely degrades the signal-to-noise ratio[2]. This condition does not constitute a difficulty in studies where a laser can be employed for pumping the optical level. But since a suitable laser with a light output at the UV wavelength of 1942 Å is not available at the present time, this difficulty has impeded the development of a trapped mercury ion microwave frequency standard.

As part of our investigation at JPL to seek an approach for improving the signal-to-noise ratio, we proposed in 1980 to utilize a different pumping scheme with the ^{199}Hg ion[6]. An inspection of the energy level diagram of this ion indicated that a two photon pumping scheme could be utilized to pump the $^2S_{1/2}$ (F = 1) $\rightarrow {}^2D_{5/2}$ transition (Fig. 1). In the case of the mercury ion, the decay of the "forbidden" $^2D_{5/2}$ state to the ground state was observed previously in the literature[7] with a relatively strong emission at 2815 Å. We proposed to utilize the light from a single mode dye laser at 5630 Å to pump the $^2S_{1/2}$ (F = 1) $\rightarrow {}^2D_{5/2}$ transition via two photons[8]. The fluorescent light at 2815 Å could then be detected without a background contribution from the pump light. The result would be a significant improvement of the signal to noise ratio. This approach was also proposed by Wineland[9], in a presentation given at the 1981 Frequency Control Symposium, in connection with the development of an optical frequency standard, based on a previous theoretical study at JILA[10].

While this laser induced two photon pumping scheme with $^{199}Hg^+$ could significantly contribute to an experimental determination of the

performance capability of the trapped mercury ion microwave standard, it is obvious that its usefulness is limited to that of a laboratory device. The required dye laser system makes it impractical for space-borne, as well as ground based applications, requiring a long term reliable performance. We have therefore pursued, in parallel with the study of this scheme, an effort to design improved optics for the detection of the fluorescence signal which would enhance the signal-to-noise in the conventional pumping scheme. In the design of Jardino et al[4] a signal-to-noise ratio of about 10 to one was reported. We have designed an optical detection system which we believe can improve their value by a factor of 10. The details of this design, presently under construction, will be published after the required tests are concluded. With this improvement we should be able to obtain a satisfactory level of performance, and still use a conventional mercury ion light source. We also determined that the success of such a device would depend on a reliable operation of the mercury ion lamp. Presently we are engaged in efforts aimed at the improved operational life of mercury ion lamps; we believe that it is possible to extend the operational life of the lamp by a factor of 5, through a careful determination of the relevant parameters.

Finally, mention should be made of the choice of an appropriate trap. The use of an rf trap as opposed to a Penning trap is pertinent for this particular application because rf traps eliminate the need for a magnet with very high stability, as required by Penning traps. The influence of rf heating however is an undesirable feature in the trade off. Recent studies involving the use of a buffer gas for cooling the trapped ions appear quite promising. In particular, Schaaf et al have achieved a factor of 3 reduction in the temperature of Ba^+ ions stored in an rf trap, through collisions with a helium buffer[11].

Based on the above consideration, the development of a trapped mercury ion microwave standard suitable for space applications appears quite feasible.

Optical Frequency Standard

The development of an optical frequency standard is expected to make the achievement of stabilities of a part in 10^{18} and higher possible. Presently efforts to develop cryogenic hydrogen masers[12] and superconducting cavity stabilized oscillators are also aimed at the same objective. Optical frequency standards utilizing Terahertz frequencies and extremely high line Q's are particularly promising for the development of ultra-stable frequency standards. Application of ion traps in this area can greatly aid the study of relevant concepts for the realization of this goal. In particular Dehmelt's proposed mono-ion oscillator utilizing optical transitions of a single ion confined in an rf trap seems to hold considerable promise. Because of its state of complete rest, the single ion may be shielded almost totally from interaction with the environment. With the application of minute laser powers and suitable photon detection, this device could have the capability of producing stabilities in the range of parts in 10^{18}.

The $^2D_{5/2}$ transition of mercury ion with a calculated lifetime of 0.1 s and 10 Hz line width is also a promising candidate in optical frequency applications. With a two photon pumping of this level from the ground state with counter-propagating laser beams, the first order Doppler effect will be completely eliminated. There are however some difficulties that are anticipated with this scheme. First, as mentioned before, the problem of the second order Doppler shift proves an obstacle if an rf trap is used. With a Penning trap, the ions may be cooled to very low temperatures, as demonstrated at NBS[13], and thus the second order Doppler may be essentially eliminated. There could, however, be a line broadening effect due to the quadrupole perturbation of the static electric field of the Penning trap on the ions. Second, the effect of the quadratic Stark shift associated with the two photon pumping should also be carefully investigated, particularly because a large laser intensity may be required for the two photon pumping of this magnetic quadrupole transition. Nevertheless it is expected that an effort

utilizing this approach would provide valuable information concerning the possibility of pumping a narrow metastable state to be used in the development of an optical frequency standard, or in applications where solid state lasers could be used to replace conventional pump lights.

Conclusion

Recent results from various laboratories have clearly demonstrated the potential of ion traps as precision frequency standards. Nevertheless considerable work remains to be done before the full potential of such devices could be realized. With respect to microwave frequency standards, the concept demonstration phase is already complete, and a working unit has been constructed[4]. There is however considerable room for improvement with regard to the signal to noise problem. The 40 GHz microwave frequency implies that a careful design should be implemented to ensure the elimination of the unwanted side bands in the microwave pump signal. The development of a long life, high performance light source to be used in a trapped mercury ion microwave standard requires attention. Finally, the long term performance of a trapped mercury ion microwave standard is yet to be investigated. This is a necessary step since such devices are expected to have high stabilities for long averaging intervals.

While newly proposed two photon pumping schemes in conjunction with mercury ions promise exciting developments for both microwave and optical frequency standards, it would be useful to carry out investigations with other ions that may be potential candidates[14] to evaluate their usefulness for this application. The concept of trapped ion frequency standards has come a long way since the early work of Major; yet we may expect to see exciting new developments in not too distant a future.

This paper presents the results of one phase of research carried out at the Jet Propulsion Laboratory, California Institute of Technology, under contract No. NAS 7-100, sponsored by the National Aeronautics and Space Administration.

REFERENCES

1. Frostor, E.N., Major, F.G., and Dehmelt, H.G., Phys. Rev. Lett. 16, 221 (1966).

2. Major, F.G., NASA Report No. X-521-69-167, (1969).

3. Major, F.G., and Werth, G., Phys. Rev. Lett. 30, 1155 (1973).

4. Jardino, M., Desaintfuscien, M., Barillet, R., Viennet, J., Petit, P., and Audoin, C., Appl. Phys. 24, 107 (1981).

5. Dehmelt, H.G., Proceedings of Third Symposium on Frequency Standards and Metrology, Aussois, France, Oct. 1981. In press.

6. Proposal to JPL's DDF, July, 1980.

7. Morozowski, S., Phys. Rev. 57, 207 (1940).

8. Bloembergen, N., and Levenson, M.D., in: "High Resolution Laser Spectroscopy", ed. by K. Shimoda (Springer-Verlag, New York 1976) chapter 8.

9. Wineland, D.J., Itano, W.M., Berquist, J.C., and Walls, F.L., Proceedings of 35th Annual Frequency Control Symposium, Philadelphia, PA., May 1981. In press.

10. Bender, P.L., Hall, J.L., Gartstang, R.H., Pichanick, F.M., Smith, W.W., Barger, R.L., and West, J.B., Bull. Am. Phys. Soc. 21, 599 (1976).

11. Schaat, H., Schmelding, V., and Werth, G., Appl. Phys. 25, 249 (1981).

12. Crampton, S.B., Souza, S.A., and Krupczak, G., Proc. Third Symposium on Frequency Standards and Metrology, Aussois, France, Oct. 1981. In press.

13. Drullinger, R.E., Wineland, D.J., and Berquist, J.C., Appl. Phys. 22, 365 (1980).

14. Strumia, F., Proceedings of 32nd Annual Symposium on Frequency Control, June 1978, p. 444.

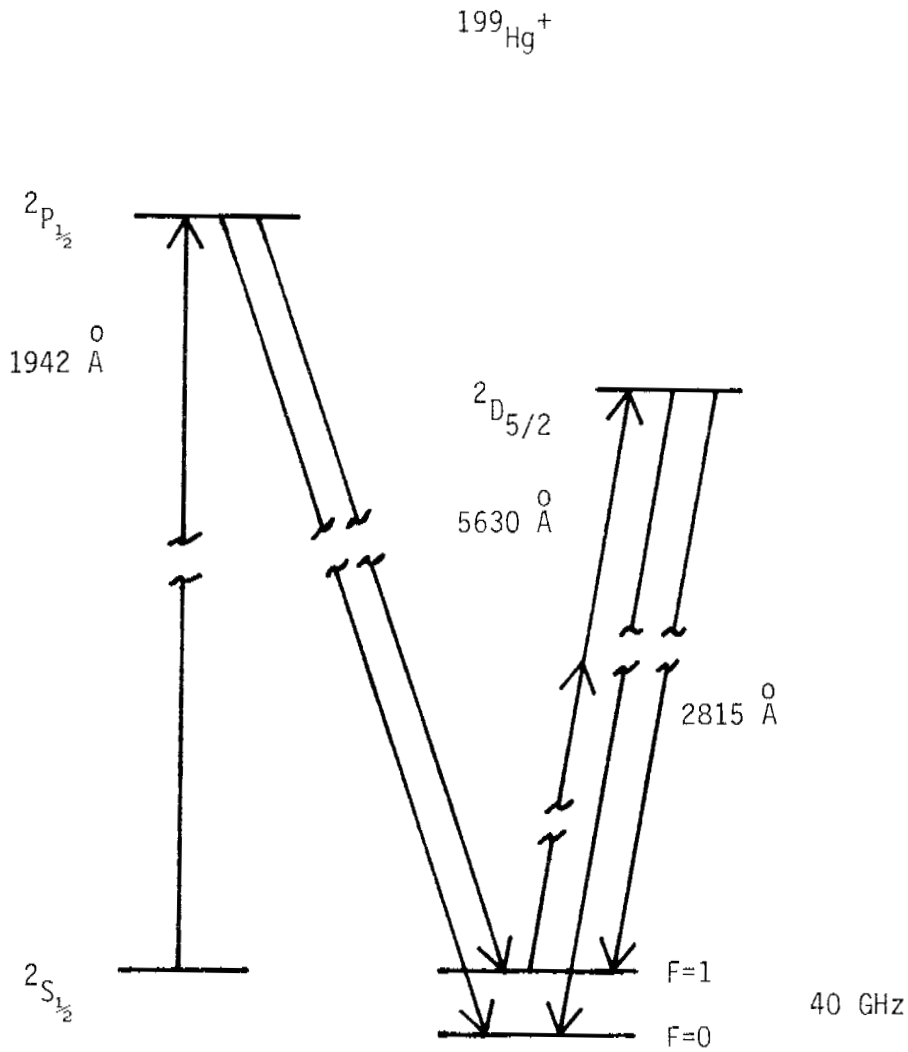

FIG. 1-SIMPLIFIED DIAGRAM OF MERCURY ION LEVEL STRUTURE

QUESTIONS AND ANSWERS

RELATIVE TO PAPERS: 28, 29, 30, & 31

PROFESSOR ALLEY:

You alluded to a new optical detection scheme, but you did not say what it was.

MR. MALEKI:

That's right.

PROFESSOR ALLEY:

Can you say something.

MR. MALEKI:

Well, essentially it is nothing dramatic. What we are talking about is sitting down and determining precisely the proper parameters. And determining, in particular, the proper components, optical components. I think we can do that.

Like I said, our models show that. This, as I explained, is right now being built. And I believe we are going to have some data in the not too distant future at which time, then, you will get all the details.

PROFESSOR ALLEY:

Thank you.

May I ask another question of Len Cutler? Len, have you tried coherently phased RF pulses in some sort of power of two pulse, or something like that, to shift populations?

DR. CUTLER:

No, we haven't, Carroll. We've thought of this. The lifetime in the trap is certainly long enough. There's no problem there. But there are other relaxations. For example, if you have helium present there are relaxations caused by that. So we haven't actually tried it.

PROFESSOR ALLEY:

Thank you.

Could I address one more question, Bob, please to Dr. Wineland?

What is the type of laser that you are now using, the whole scheme, to do your laser cooling?

DR. WINELAND:

The experiments we've done so far, both on magnesium and beryllium, but those aren't very good frequency standard candidates. The reason is that we can drive the optical transitions with doubled dye-lasers.

The scheme we're working on to do mercury is fairly complicated, but looks feasible for the low powers that we need. That is where we double an argon laser and mix the output of that with a dye-laser to get 194 nanometers. But we haven't realized that source yet.

PROFESSOR ALLEY:

It's all CW?

DR. WINELAND:

It's all CW.

PROFESSOR ALLEY:

You haven't tried any short pulse in the doubling?

DR. WINELAND:

Well, the problem there is to do the laser cooling we basically want a laser line which is less than the optical transition line. And it's not inconceivable you could do that with lasers. But then the problem is that the repetition rate of lasers, pulse lasers, is just too short to do effective laser cooling.

So we really want it to be CW.

DR. HARRY WANG, Hughes Research Laboratory

I'm just addressing my question to Len or Dave. My question is can you eliminate the ion pumps -- the vacuum pumps from your standard? You know, in view of the realization you might increase

in closed system. What is the possibility for a closed ion standard so that you can eliminate ion pumps? And what is the price you have to pay for such a system?

DR. CUTLER:

I think it is possible to have a closed system. All of the components that go inside are such that you can bake out at a very high temperature, and get a very good vacuum.

Fortunately, in the system that we have built so far we had a seal break. And so the vacuum deteriorated as a result of that. But that's not a fundamental problem.

So I think it's possible to have a closed system. You may very well want to have an ion pump present, though, if you are going to use viscous drag cooling with a gas to control the pressure of this gas.

The mercury is very well limited by a number of materials. For example, if you have a lot of copper around, the mercury sticks to the copper very well. So the background pressure of mercury is not much of a problem.

DR. VESSOT:

I think we'll eat into our coffee break for another one or two minutes.

DR. JOHN VIG, U.S. Army Electronics Technology & Devices Lab

Len Cutler gave some projections of stability and accuracy of a commercial standard. I wonder if you have some other projections, such as size, power consumption, relative cost, and the probability that we might see a commercial standard, say, in five years?

DR. CUTLER:

Okay. Tackling the last one first. I think it is possible barring some unfortunate, unforeseen, really bad thing that would prevent it, that we will see something within, say, five years.

As far as size and weight are concerned, I think it's entirely possible to put a complete standard inside a box that's roughly the same size as a commercial cesium box.

Weight could possibly be a little bit less than cesium.

Power consumption; if we use an RF excited lamp, mercury 202 lamp, probably will be somewhat higher than cesium, just because of the lamp power.

I would suspect that costs could be about comparable with cesium.

And expect the performance to be considerably improved as the numbers I talked about earlier.

DR. WINELAND:

Well, I have a comment and a question for Lou Maleki.

First of all, I don't think the signal to background problem has to really be a problem. Just as an example, in some of the experiments we're doing now on beryllium on a few hundred ions we see a signal to background of about 1,000. So good optical filtering, and so on, it doesn't have to be a problem.

The question is what do you think the principal uses for an optical frequency standard will be?

MR. MALEKI:

The first comment is half true, in the sense that the signal to background problem that I'm talking about is one that Major has had to deal with and Giardino has had to deal with.

I suspect some of the chopping scheme that Len is using is to circumvent that problem.

The second thing as to what it is going to be good for. Well, I was hoping you would tell me that yourself. But I could at least mention that some of the experiments, regular science experiments that they are talking about they are interested in very high stability.

It turns out that application of the quantum nondemolition schemes that are going to be used, gravity waves, makes it useful in the future -- now by future I -- may be beyond my life time -- but in the future to use frequency standards upwards of 10 to the minus 21.

But, finally, it is the challenge of it. I mean it is there. And you have to get there. I thought that was the drive that NBS needed.