NEW GOES SATELLITE SYNCHRONIZED TIME CODE GENERATOR

by

D. Earl Fossler and Roger K. Olson
TRAK Systems, a Division of TRAK Microwave Corp.
Tampa, Florida

ABSTRACT

This paper describes the TRAK Systems' GOES Satellite Synchronized Time Code Generator. TRAK Systems has developed this timing instrument to supply improved accuracy over most existing GOES receiver clocks. Integrating a classical time code generator with a GOES receiver combining the best of both.

INTRODUCTION

During the last few years, several GOES Satellite Time Receivers have been designed by various manufacturers. All output time with accuracies of 2 milliseconds or better (at least one has a reported accuracy of better than 100 microseconds) when locked to the satellite signal but all lack several features desired by many users. All known designs cannot output a usable time signal between power turn-on and signal acquisition. When synchronization with the satellite signal is lost, the accuracy of the time outputs degrades rapidly in many designs. The 1PPS output in several designs exhibits significant jitter during various microprocessor activities. Output options are very limited and special outputs are not economical.

There has been a significant interest to correct these deficiencies by providing a manually presettable time code generator which can operate as a stand alone generator or fully synchronized to the satellite signal. Until now this could only be accomplished by purchasing two separate units from two suppliers. As a result of these problems, TRAK has designed a new timing instrument to correct these deficiencies in a single timing unit.

PRODUCT DESCRIPTION

TRAK Systems Model 8600 Satellite Synchronized Generator is a precision time signal generator with an internal GOES satellite receiver used to synchronize the generator. The single 1-3/4-inch high rack mountable instrument provides for both a satellite synchronized time signal generator or a manual front panel settable time signal generator.

This Synchronized Generator was designed to provide an accurate time source when synchronized to the GOES Satellite. It also will function as a local time source when synchronization is impossible.

This unit generates time by counting down either an external 1 MHz input or using its internal temperature controlled oven crystal oscillator. When synchronized to the satellite signal, these count down registers are continuously synchronized to the satellite 100 Hz reference. In this mode, the time of day accumulator will be set and periodically updated using the satellite data. Initial setting may also be done manually to provide usable time outputs before the satellite data is acquired.

The only required set-up mode parameters are Latitude and Longitude of the receiver site. These values are inputted via the front panel switches and stored in a non-volatile RAM. Time zone offset may also be entered to display and output local time.

The UHF receiver is a completely shielded coherent synchronous digital dual conversion receiver with automatic tuning for reception of both the GOES East and GOES West satellites. The receiver is fully enclosed in a metal case and located within the generator chassis. Signal enhancement and data detection is accomplished outside the receiver. Data and clock are inputted to the microprocessor for frame synchronization and data processing.

A microprocessor is used to control various operations of the unit. It is used to examine the detected satellite data, provide frame synchronization, test data for bit errors, select good data, calculate path delays, correct data for actual path delay, synchronize clocking frequency to the satellite clock, provide for synchronous time update and provide for interface with RS232 and IEEE 488.

Path delay calculations are performed on initial acquisition and each time a change of satellite position is observed. The signal path delay is calculated with a resolution of one microsecond and with an accuracy of better than 10 microseconds.

The time of year accumulator, its minor scaler (frequency dividers), the parallel time outputs and the serial time code generator(s) are all hardware to provide maximum time signal accuracy and coherency. The 1PPS is generated by a hardware divider chain from either the external 1 MHz or the internal temperature controlled oven crystal oscillator. A 100 Hz digital phase lock loop is corrected one microsecond at a time to maintain phase lock with the satellite 100 Hz signal.

Time signal outputs provided are:

- Fully synchronizes 1PPS output
- Parallel BCD with strobes
- IRIG B Modulated time code
- IRIG B DC time code
- IEEE 488 I/O interface
- RS 232 I/O interface

Optional outputs include:

- Additional serial time codes
- Parallel binary codes
- Additional precision rates

A list of features are given in Table 1 with a general specification following. A block diagram is in Figure 1.

REFERENCES

(1) GOES Satellite Time Code Dissemination by R.E. Beehler published in Proceeding of the Fourteenth Annual Precise Time and Time Internal (PTTI) Applications and Planning Meeting.

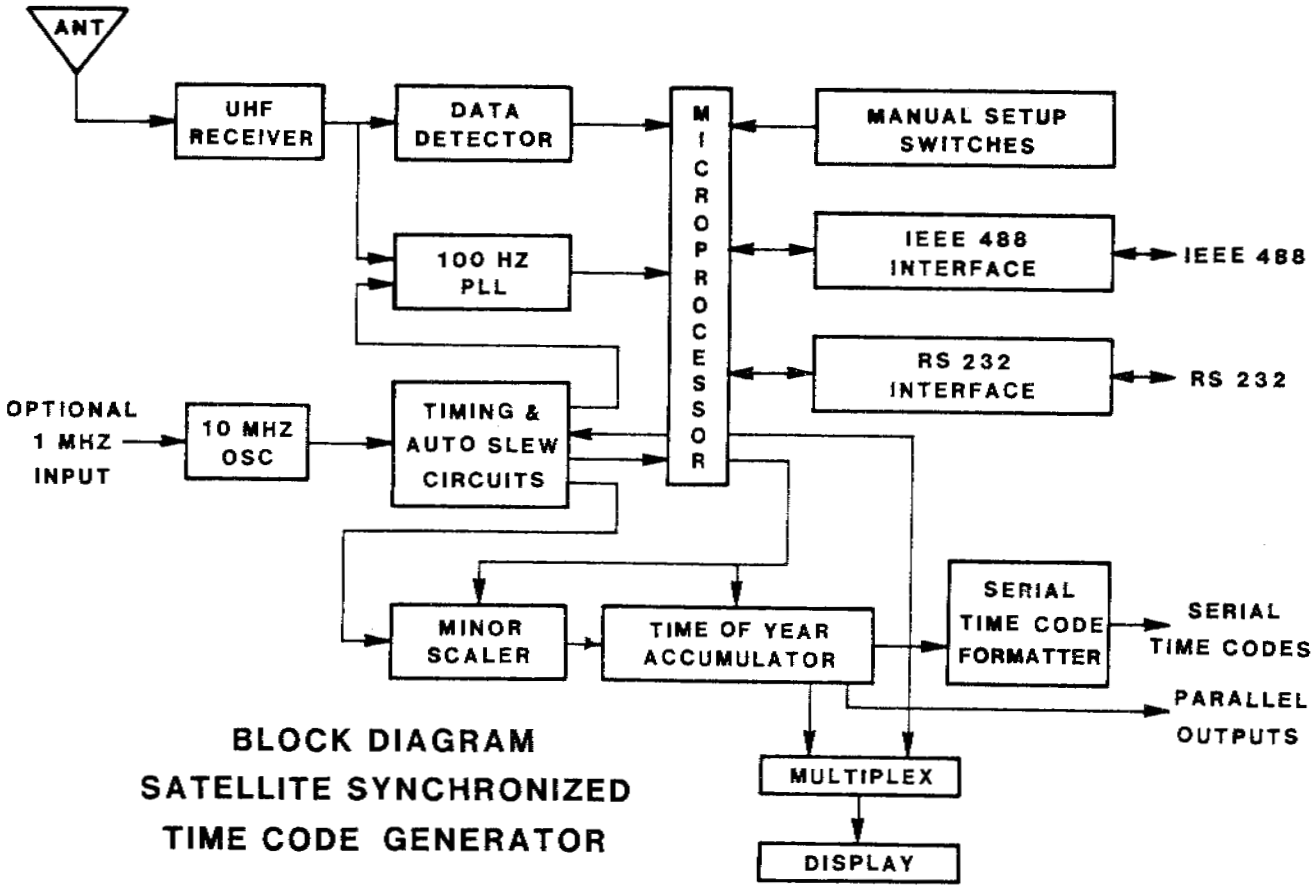

BLOCK DIAGRAM
SATELLITE SYNCHRONIZED
TIME CODE GENERATOR

TABLE 1

Model 8600 Satellite Synchonized Generator key features:

- Continuous Path Delay Correction
- Fully Synchronized 1 PPS Output
- Internal Drop-In Receiver
- Microprocessor Controlled
- Receiver Location Entered as Latitude and Longitude
- Hardware Frequency Divider, Time Accumulator and Time Code Generation Logic
- Displays UTC or Local Time
- Displays All Set-Up Parameters
- IRIG B Output
- Optional Additional Time Code Outputs
- Parallel BCD Time of Year Output
- Optional Special Parallel Outputs
- IEEE-488 and RS232 I/O Ports
- Single 1-3/4" Chassis
- Antenna Supplied
- Satellite Status Outputs

RECEIVER: Internal drop-in coherent synchronous digital UHF dual conversion receiver with automatic tuning for the reception of satellite generated signals at 468.8250 MHz and 468.8375 MHz.

ANTENNA: Outside mast mounted antenna furnished with unit.

SYSTEM SENSITIVITY: The sensitivity is suitable for proper operation when the viewing angle exceeds seven degrees above the horizon under normal conditions.

OPERATION MODES: A CPU section supervises internal operation and allows the Receiver to synchronize the generator only after analyzing the received data for acceptable content. Once synchronized, time is

continuously and smoothly corrected by tracking the received 100 Hz signal and by making path corrections based on received data. Three operating modes are provided:

SETUP (SU): Permits entry of setup data such as latitude, longitude, time zone, preset time.

GENERATE: Unit generates time, including all rate, time code, and computer outputs, without satellite time synchronization. Time accumulation starts from the time entered during SETUP.

SYNC: Same as GENERATE except that Receiver provides time and frequency updates to the Generator once the Receiver is processing acceptable data.

TIME BASE: The Model 8600 has an internal crystal oscillator and may also be operated from an external 1 MHz standard.

INTERNAL FREQUENCY STANDARD:

Frequency: 10 MHz
Aging rate: $\pm 2 \times 10^{-9}$ per day
Temperature stability: $\pm 5 \times 10^{-8}$ (0 to 60 deg C)

EXTERNAL STANDARD INPUT:

Frequency 1 MHz
Impedance: 50 ohms
Amplitude: 0.5 to 10 volts peak-to-peak
Waveshape: Sinewave or squarewave.

TIME/DATA PRESETTING: Front panel thumbwheel switches allows for presetting the time in seconds through days. Latitude, longitude, and time zone correction data are also entered by these switches.

TIME/SETUP/DISPLAY: Nine high-intensity 0.6 inch planar LED indicators display time of year in days, hours, minutes, and seconds. In the Setup mode, these decimal indicators display setup parameters. Decimal points are used to indicate operating modes and status.

TIME CODE OUTPUT:

Format: IRIG B 12Z
Mark/space ratio: 2:1 to 6:1 adjustable
Levels/DRIVE: Adjustable 1 to 5 VPP into a 50 ohm level.

1PPS: OUTPUT:

Fully synchronized to satellite data clock

Duty cycle: 10%., POSITIVE-GOING AT ON TIME
Levels/DRIVE: TTL levels into a 700 ohm load.

PARALLEL BCD OUTPUTS:

Format: BCD time of year in hundreds of microseconds through hundreds of days

Levels/Drive: TTL levels into a 700 ohm load.

BUILT-IN MONITOR:

A built in monitor program provides data outputs via both IEEE-488 and RS-232 ports. The available output data are:

Time in milliseconds through days
Time of last synchronization
Last delay calculation
Current data being received from satellite

RS-232 INTERFACE:

IEEE-488 INTERFACE: (IEEE-488-1978 CONVENTIONS)

POWER:

105 TO 125 VAC 48 TO 440 Hz, 30 WATTS

PHYSICAL:

Width: 19 inches standard rack mount
Height: 1-3/4 inches
Depth: 19 inches

QUESTIONS AND ANSWERS

BOB HESSLBERTH, SPECTRACOM: What's the price?

MR. FOSSLER: The introductory price is $7,500. If every thing goes well, we expect that price to drop. That includes the antenna.

MR. BUISSON: When you switch from the east satellites to the west satellites, do you have to adjust the antenna?

MR. FOSSLER: There are two ways to handle the antenna. If you are in the eastern part of the United States, and point it in the right direction, you get both satellites. If you are in the central or western part, we give you a second antenna and you would switch with a coaxial relay at the time when you switch satellites.