A SIMPLIFIED GPS C/A RECEIVER FRONT END WITH LOW NOISE PERFORMANCE

D. D. Davis and A. D. J. Clements

Time and Frequency Division
National Bureau of Standards
Boulder, Colorado 80303

ABSTRACT

A redesign of the antenna electronics package for the NBS/GPS C/A receiver has resulted in significantly reduced cost and improved performance. Major improvements include a simplified and more reliable multiplier/mixer, elimination of all twelve piston trimmer tuning capacitors in the original design, elimination of expensive bandpass filters, less expensive antenna and a simplified packaging scheme.

BACKGROUND

Very early in the design of the NBS/GPS receiver (in 1979), we decided to include the first mixer and some IF amplification at the antenna. A local oscillator (LO) signal at 100 MHz, along with +15 Vdc, was sent to the antenna package on one cable. The LO was multiplied to 1500 MHz, and mixed with the GPS signal at 1575.42 MHz, generating an IF of 75.42 MHz. After amplification and filtering the IF signal is sent down to the receiver on a second coax cable.

Down conversion to the IF at the antenna package allows us to have almost unlimited cable lengths between the receiver and antenna. Cable suitable for 75 to 100 MHz is inexpensive and easy to work with. Several NBS/GPS receivers are operating with RG-58 cables over 60 meters long. In contrast, a 60 meter cable suitable for operation at 1575 MHz would be a "semirigid" air dielectric type and would not be easy to pull through raceways and ducts.

Unfortunately, down conversion at the antenna creates other problems, in that in addition to an RF amplifier, we have added a LO multiplier chain, mixer, and IF amplifier that must operate reliably from -25°C to +60°C. We have had some problems with the original multiplier chain design which convinced us that a complete redesign of the antenna package was necessary.

PHYSICAL PACKAGING

A comparison of the new and old antenna packages is shown in Figure 1. Both are drawn to the same relative scale. The new package is rectangular, 23 cm x 23 cm x 10 cm (9" x 9" x4"). The package consists of the 10 cm high aluminum cover with antenna and dome attached, with a 2.5 cm high inside fitting aluminum lid inserted in the bottom. A single fiberglass-epoxy G-10 printed circuit board is mounted to the lid with standoffs.

†Work of the U.S. Government; not subject to U.S. copyright.

Figure 2 shows the major elements of the physical construction. One primary goal was to minimize cost of the antenna package while maintaining a rugged, reliable, reproducible unit.

The single G-10 printed circuit board with rf shields mounted on it where needed is much less expensive than the milled aluminum cases used in the original package. In fact, any one of the 3 milled aluminum cases in the original design was more expensive than the complete new physical package. The sections of aluminum heat sink extrusions used for rf shields require a minimum of machine work. The total cost of 4 shields and 3 covers is less than $20 per package, based on fabrication of 15 antenna packages.

No attempt was made to hermetically seal the antenna package, since our past experience indicates that water can always get in, and once inside, it stays. Rather, edges of the inside fitting lid were sanded with a belt sander so the lid was a loose fit in the cover. This allows the case to breathe and maintain the inside at ambient humidity. The lid is inset slightly so that water running down the sides of the cover will not "wick up" around the lid. All aluminum surfaces were given a protective chromate conversion surface treatment and sprayed with an aluminum metal sealer. After all components were mounted, the PC board was also sprayed with two coats of sealer, which also provides moisture proofing and fungus protection. All outside surfaces of the aluminum cover were sprayed with two coats of white epoxy paint.

ELECTRONICS

The electronics package shown in Figure 3 provides about 65 db of gain from antenna to IF output. All rf circuitry at 750 MHz and above is fabricated as microstripline on the main circuit board except for the single Ga As FET low noise amplifier. Since this stage determines the noise figure of the system, we decided not to attempt to build it on the relatively lossy G-10 circuit board. Our original intention was to fabricate the FET stage on a separate glass-teflon circuit board, but our second "point-to-point" wired prototype LNA board worked so well that we decided to use that approach. Because of the relatively simple construction a technician can easily fabricate ten LNA boards in one day.

The overall noise figure of the front end is adjusted by bending a small inductor in series with the gate of the LNA. The noise figure for the first ten units is between 1.0 and 1.25 dB, measured from LNA input to IF output. The noise figure is degraded 0.2 dB by losses in the cable connecting antenna and LNA.

One of our primary goals was elimination of all tuning capacitors in the new antenna package. Elimination of RF piston trimmers which cost a total of $160 in the old package also helps improve reliability. We avoid tuning of the 750 MHz and 1575 MHz microstrip bandpass filters by designing for 10% filter bandwidth. Our primary concern with the 1575 MHz filter is to insure that response is down at least 16 dB at the 1425 MHz IF image, so overall noise figure will not be degraded. Ultimate rejection of the stripline filter is a modest 30 dB which is not

nearly as high the $200 commercial lumped element filter used in the original antenna package. However it has proved adequate in this application.

All tuned circuits in the multiplier chain (50 MHz and 150 MHz) as well as the 75 MHz (±12 MHz) IF band pass filter are adjusted by bending the air wound coils. No mechanically adjusted tuning slugs are used in any circuit. All coils are wound using AWG-22 heat strippable wire, and are self-supporting on the circuit board. Besides cost reduction and improved reliability, we feel elimination of variable capacitors helps improve stability over the operating temperature range.

Group delay of the antenna package, an important parameter in a time transfer receiver, is primarily determined by the 75 MHz IF bandpass group delay of approximately 30 ns (total group delay for the RF section is under 5 ns). We have tested the IF section for changes in group delay over a temperature range of -25°C to +50°C and found the variation to be less than 1 ns. We hope to verify the overall group delay variation with temperature in the next few months, but expect that it will differ little from the I.F. group delay variation.

The multiplier chain and twin diode second harmonic mixer have been trouble free in this design. Use of this mixer cuts performance requirements of the multiplier chain substantially. First, the injection frequency is half that normally required by a mixer, 750 MHz in this case rather than 1500 MHz. Second, the power level required for the 750 MHz can be as low as -3 dBm, rather than the typical +6 dBm required by most double balanced mixers. Other than limited maximum signal level (-30 dBm) and limited bandwidth (20%) restrictions, the twin diode mixer is an excellent, low cost choice for a mixer. A more complete description can be found in the references [1].

The multiplier chain provides all necessary power gain at relatively low frequencies where gain is easy to obtain. The +15 dBm drive level at 150 MHz to the X 5 multiplier varies less than 1 dB as the 50 MHz input level is changed from +6 dBm to -15 dBm. The 150 MHz drive level is also constant (within 1 dB) over the full temperature range.

The X 5 diode multiplier was derived from the design of a similar multiplier in a Pay-TV down converter. The Pay-TV converter used a 1N914 switching diode to multiply to 1100 MHz. We chose to use a more recent vintage switching diode, the 1N4153, which worked very well in this circuit. Conversion efficiency is about 10%, including almost 3 dB loss in the 750 MHz bandpass filter.

The IF amplifier uses three wideband (dc to 400 MHz) integrated circuit gain blocks. Each circuit has a gain of 14 dB, providing a total of 42 dB gain. Low pass (150 MHz) filters before the first and after the second gain block, along with the bandpass filter between the first and second IF stages result in complete circuit stability with no tendency for spurious oscillation.

The antenna used with the new front end is a commercial implementation [2] of the volute or quadra-spiral helix, popularized by Kilgus [3]. It is relatively small (2.5 cm diameter by 5 cm high) and inexpensive to construct, consisting of three pieces of AWG-16 wire and one piece of miniature semi-rigid coax, the same diameter as AWG-16 wire. The radiation pattern response is right circular with near hemisphere coverage. Over a narrow frequency range near resonance (± 20 MHz) the VSWR is less than 1.4:1: however it becomes highly reactive outside of this narrow range.

Since the LNA, when adjusted for lowest noise figure, is not unconditionally stable at all frequencies up to the 60 GHz cutoff frequency of the FET, oscillations can occur due to the widely varying impedance of the antenna away from its resonant frequency. However, by carefully controlling the length of the cable connecting the antenna to the LNA, it is possible to present a stable set of source impedances. The same cable length has worked with all units, but a change in cable length of 2 cm will guarantee oscillation. A more elegant solution would be to provide a ferrite isolator in the LNA input, but this would both increase cost and degrade noise figure.

ACKNOWLEDGMENTS

Our thanks to Chuck King for his helpful suggestions on the diode multiplier and mixer. We are also indebted to Ron Hyatt for providing us with a sample antenna of his design and permission to replicate it for this project.

REFERENCES

[1] Jim Dietrich, "Twin-Diode Mixer - A New Microwave Mixer", Ham Radio, Aug. 78, p.p. 84-86

[2] Kai P. Yiu, Richard Crawford and Ralph Eschenbach, "A Low-Cost GPS Receiver for Land Navigation", Navigation, Fall 82, p.p. 204-220

[3] C. C. Kilgus, "Resonant Quadrifilor Helix Design", Microwave Journal, Dec. 70, p.p. 48-52

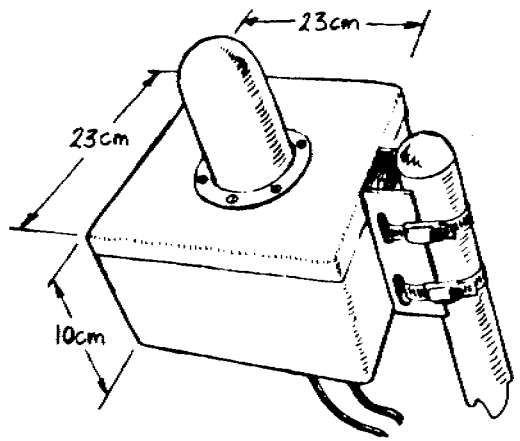

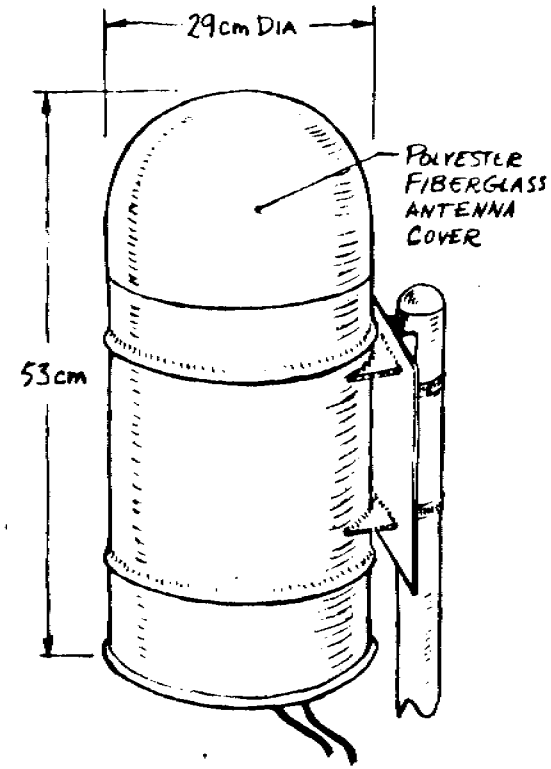

	NEW PACKAGE	OLD PACKAGE
PARTS COST	$200	$1000
NOISE FIGURE	<1.5 dB	>2 dB (typical)
REPRODUCIBLE	YES	VERY DIFFICULT
TEMPERATURE RANGE	OPERATES FROM $-25^{o}C$ to $+60^{o}C$	SEVERAL FAILURES AT LOW TEMP

Figure 1. Comparison of Old and New Antenna Packages

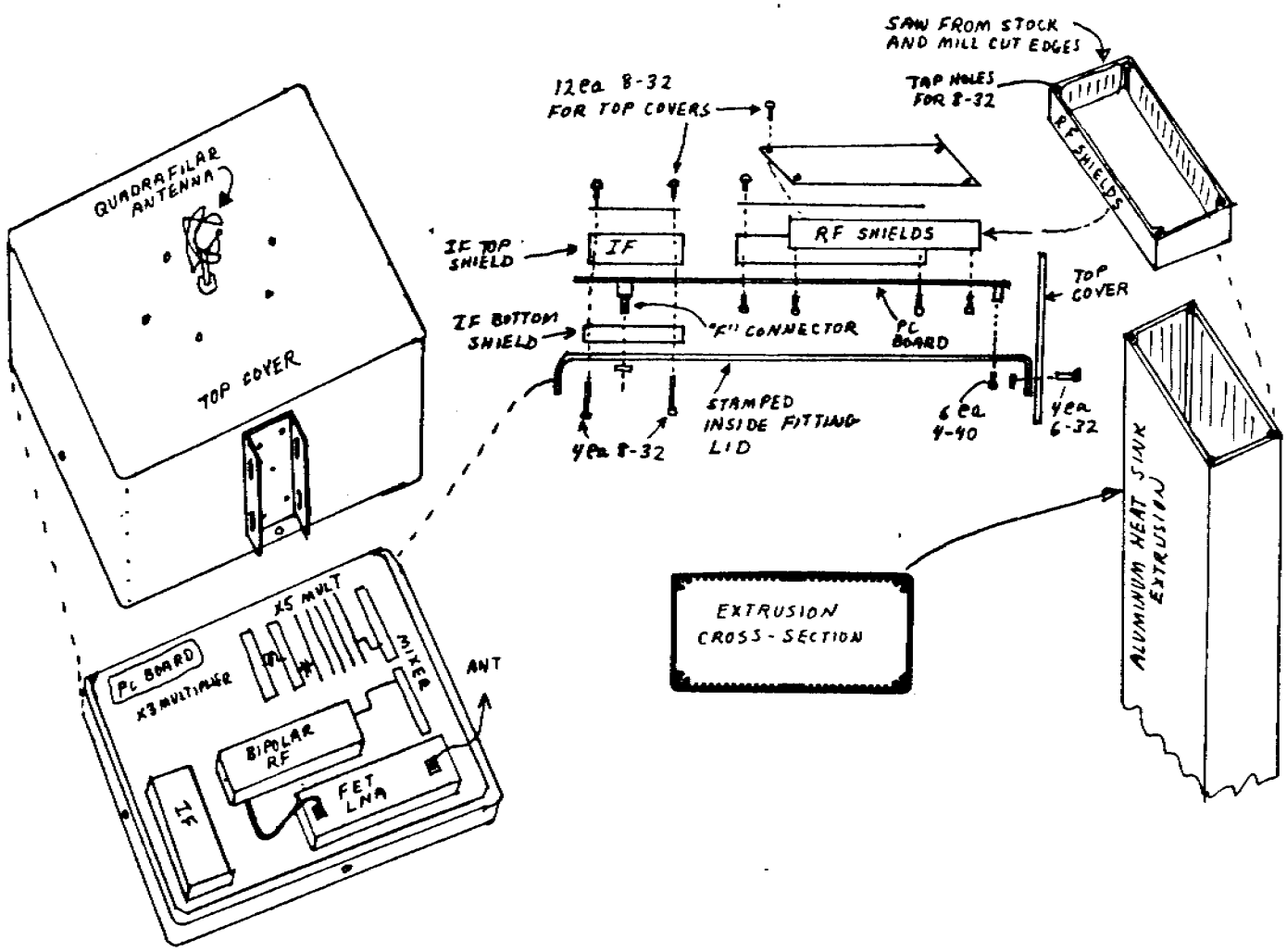

Figure 2. Physical Construction of Antenna Package

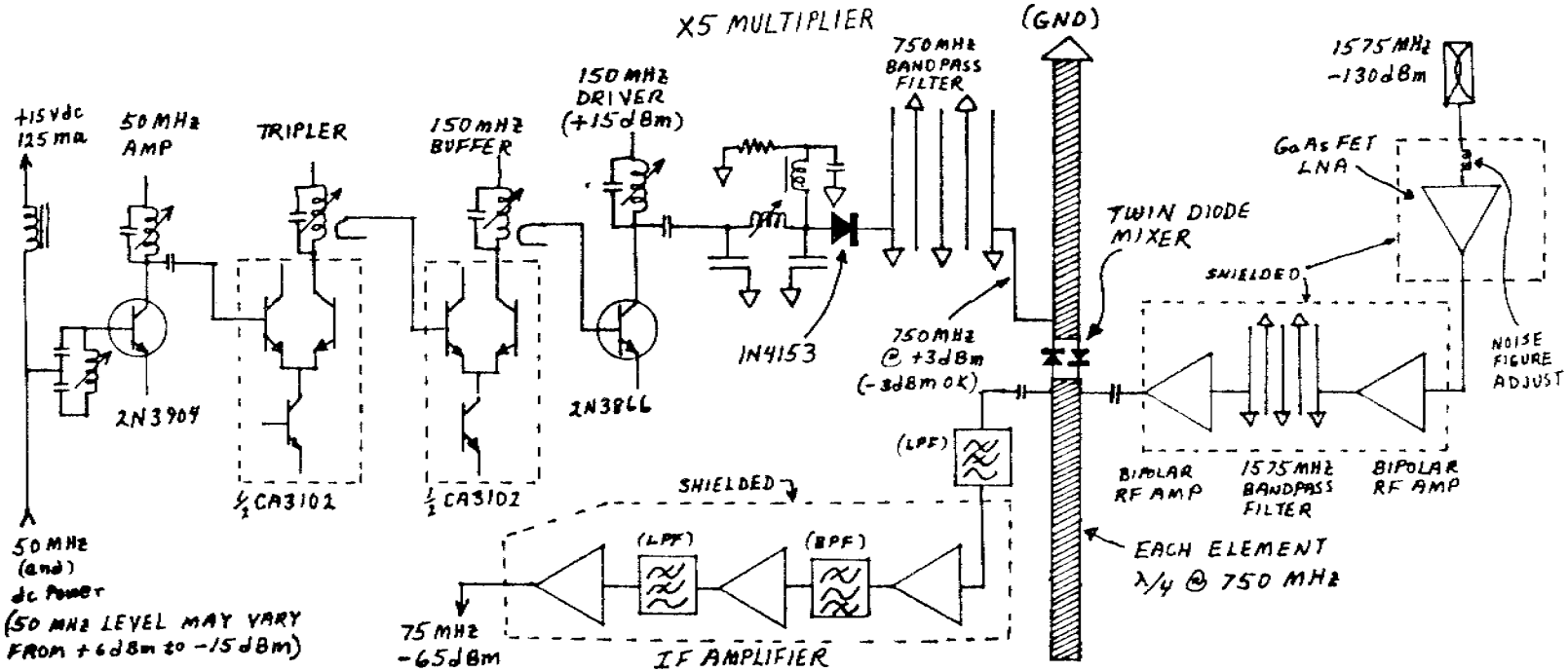

Figure 3. Antenna Electronics

QUESTIONS AND ANSWERS

VICTOR REINHARDT, HUGHES AIRCRAFT: That mixer that you used, is there any place where data is available on it?

MR. ALLAN: I am glad that you asked that question. In fact, the reason that we presented this paper, since N.B.S. is a standards laboratory service organization, we have had several requests for the circuit. Rather than give it out on a one at a time basis, we decided to go ahead and make it available to the public. Anyone who desires to have copies of it, we are now making it available, and we are changing out our old receivers with it as we have the opportunity. Certainly you are welcome to it. There is a fee in terms of labor and cost of parts and costs. It's very reasonable.

GEORGE RESCH, JET PROPULSION LABORATORY: What kind of scheme did you use in the last slide to correct for the ionosphere?

MR. ALLAN: It's the Klobuchar model that's in the data word.