DEVELOPMENT OF HYDROGEN MASERS FOR K-3 VLBI SYSTEM

Takao Morikawa, Yasusada Ohta, and Hitoshi Kiuchi
Radio Research Laboratories
Ministry of Posts and Telecommunications
Tokyo 184 Japan

ABSTRACT

The Radio Research Laboratories of Japan (RRL) has developed two field operable hydrogen masers for the VLBI joint experiment conducted by the cooperation between RRL and NASA. They are now playing an important role as the time and frequency standard of the K-3 VLBI system, which has also been developed by RRL.

The masers consist of a physics package and an electronics package. The physics package is 84cm wide, 94cm deep and 160cm high. Four permalloy magnetic shields are set in a vacuum chamber and function also as thermal radiation shields. The standoffs which support the magnetic shields, the C-coil and the cavity are made of polyimide with low thermal conductivity. Thus the thermal isolation is greatly improved. Also set in the vacuum chamber are two aluminium cylinder ovens, and the cavity temperature stability of 1mK has been achieved without thermal isolators. The cavity cylinder is made of glass ceramics (NEOCERAM) with a thermal expansion coefficient of -5.0×10^{-7}. Change of the mechanical stress on the cavity is absorbed by a Belleville spring. As the result, the temperature coefficient of the cavity frequency is reduced to 500Hz/K.

The electronics package consists of a receiver, a cavity auto tuner, and environment control circuits such as temperature controllers. The receiver uses a low noise preamplifier and an image rejection mixer, and has an overall noise figure of 4.5dB. The receiver front end and the phase locked frequency multiplier for the first local oscillator are temperature-stabilized within 5mK by a peltier module. The frequency of the standard signal is adjustable by a synthesizer with a resolution of 7×10^{-13}.

The frequency stability has been measured between the masers. The measured stability is 2×10^{-13} at 1 second, 2.4×10^{-15} at 830 seconds, and 1.4×10^{-14} at 10^5 seconds. The external magnetic field sensitivity is 2.5×10^{-13}/G, which has been measured by adding a vertical magnetic field with a Helmholtz coil. The temperature sensitivity is 2.3×10^{-14}/K, which has been obtained by changing the room temperature.

1. Introduction

The Radio Research Laboratories (RRL) has developed the K-3 VLBI system [1],[2], which is compatible with the Mark III VLBI system of NASA, for the VLBI joint experiment between RRL and NASA [3]. As a part of this project two field operable hydrogen masers have been developed as the time and frequency standard of the K-3 system.

In a VLBI system a signal from a radio star should be down-converted to the video frequency without the loss of the coherence. Therefore the phase noise of the local oscillator of the VLBI system must be small enough. The phase stability required of the local oscillator, which is phase-locked to a hydrogen maser, depends on the noise temperature of the VLBI system and the signal source, and the sample time. In the K-3 system the phase fluctuation below $\pi/8$ radian for the sample time of 600sec and the observation frequency of 8GHz was projected.

In a VLBI experiment several radio stars are observed and the delay time must be measured for each observation. Therefore the fluctuation of the system clock during the experiment must be smaller than the precision of the delay time measurement. In the Japan-USA VLBI experiment the precision of subnanosecond was required.

In order to satisfy the above requirements of the K-3 system the following frequency stability of the masers was projected as the minimum requirement.

$$\sigma_y(\tau)<1.0\times10^{-14} \qquad \tau=600\text{sec}$$
$$\sigma_y(\tau)<2.8\times10^{-14} \qquad \tau=18000\text{sec}$$

This paper presents the design and the performance of the developed masers and some discussion on the external magnetic field disturbance on the maser which has been observed at Kashima Branch where the K-3 system is located.

2. Design of the masers

The masers consist of a physics package and an electronics package. The physics package is 84cm wide, 94cm deep, and 160cm high. It weighs 550kg. The electronics package is mounted in a rack, which is 175cm high and 57cm wide. In Fig. 1 the physics packages and the electronics packages are shown.

2.1 Physics package

In Fig. 2 the structure of the physics package is shown.

2.1.1 Magnetic shielding

The maser has four permalloy magnetic shields, all of which are 2mm thick and set in a vacuum chamber. This structure has two advantages.

One is that the conduit pipe which connects the ion pump and the resonant cavity can be eliminated. This enables us to make the aperture of the magnetic shields for the hydrogen beam path smaller, which results in better magnetic shielding. The diameter of the aperture is 40mm, while that of the laboratory type maser of RRL which has a conduit pipe is 80mm. The magnetic shields have also small holes for the standoffs, which fix the shields, and for the driving axis of the cavity tuning post. The diameters of the holes are 16mm and 10mm, respectively. This structure has also enabled us to eliminate the heat-flow through the conduit pipe, and the thermal insulation can be improved.

The other advantage is that the magnetic shields function also as the thermal radiation shields, which contribute to improving the thermal isolation. The magnetic shields are degaussed by applying directly AC current of 50A [4].

2.1.2 Resonant cavity

As well known, the fluctuation of the resonance frequency of the cavity disturbs the oscillation frequency of the maser. The main causes of the fluctuation are the thermal expansion of the cavity material, the mechanical distortion of the cavity material, and the thermal fluctuation of the dielectric constant of the storage bulb. The last cause can be reduced by using a light storage bulb [5]. Fig. 3 shows the cavity structure.

The cavity cylinder and the upper end plate are made of glass ceramics (NEOCERAM) with a low thermal expansion coefficient of -5×10^{-7}. Silver conductive composition is painted on the inner surface of the glass ceramics. The measured loaded quality factor is 50000. The coarse tuning is carried out by moving the upper end plate. The screwed axis for adjusting the upper end plate is made of molybdenum which has relatively low thermal expansion coefficient of 5×10^{-6} [6]. The resolution of the coarse tuning is 1kHz.

In order to fix the cavity cylinder, a stress is given to the ceiling plate, which holds the coarse tuning axis. This stress distorts the ceiling plate and the distance between the cavity end plates is changed. In order to achieve the maser frequency stability of 1×10^{-14}, the fluctuation of the distance should be below 0.3nm. Therefore the cavity material should be highly rigid and the stress should be stable. The flexural rigidity of a plate depends on its

Young's modulus and the third power of its thickness [7]. The ceiling plate is made of alumina which has high Young's modulus of 3×10^{6} kg/cm^{2}. The base plate is 29mm thick and made of aluminium. The fluctuation of the stress is mainly caused by the thermal expansion of the cavity hold-down can. This stress change is absorbed by a Belleville spring [8], which is made of titanium. The characteristic of a Belleville spring is given by the following equations,

$$P=\frac{C_1 CEh^4}{r_2^2}$$

$$C=\pi\left(\frac{\alpha+1}{\alpha-1}-\frac{2}{\ln\alpha}\right)\left(\frac{\alpha}{\alpha-1}\right)^2$$

$$C_1=\frac{\delta}{(1-\nu^2)h}\left(\left(\frac{H}{h}-\frac{\delta}{h}\right)\left(\frac{H}{h}-\frac{\delta}{2h}\right)+1\right)$$

$$\alpha=\frac{r_2}{r_1}$$

where E and ν are the Young's modulus and the Poisson's ratio of the spring material, respectively. δ is the distortion of the spring and H is the free height of the spring. P is the load given to the spring. Other parameters are given in Fig. 4. The load of the spring of which H equals $\sqrt{2}h$ becomes constant if δ is H. Using this constant-load characteristic the stress on the ceiling plate can be stabilized. As shown in Fig. 5 the change in the cavity frequency becomes very small when the spring distortion is between 1 and 2mm. The cavity can be stabilized by setting the spring in this region.

The storage bulb is spherical and made of quartz glass. Its diameter is 180mm and the weight is 260g. The overall thermal coefficient of the cavity frequency is 500Hz/K.

2.1.3 Thermal control

The stability of the cavity temperature should be better than 1mK to achieve the maser frequency change of less than 1×10^{-14}. The thermal control is carried out by double ovens. The cavity hold-down can on which heaters and thermistor control sensors are attached is used as the inner oven. The heaters are divided into two zones, each of which is independently controlled to minimize the thermal gradient. The outer oven is made of a thick aluminium cylinder with heaters and sensors and placed on the outside of the innermost magnetic shield. It is also divided into the cylinder zone and the base zone, each of which is independently controlled. Since the heat-flow through the conduit pipe is eliminated and the thermal radiation is shielded by the magnetic shields, the residual heat-flow paths are the cables and the standoffs which support the

cavity, C-coil, magnetic shields, and the ovens. The standoffs are made of polyimide (VESPEL) with low thermal conductivity of 0.28kcal/m.hr.°C. They are outgassed in a vacuum environment by being baked at 200°C for several hours before the assemble of the maser. This process is needed to achieve high vacuum. The cables are thermally connected to the base of the outer oven to prevent the heat from flowing directly into the cavity. Thus the cavity temperature stability of 1mK is achieved without any other thermal insulators.

2.2 Electronics package

2.2.1 Phase-lock receiver

Fig. 6 shows the block diagram of the phase-lock receiver. The output signal of the maser is amplified by the low noise amplifier, which is preceded by the varactor diode for the cavity auto-tuning and the 60dB isolator. The noise figure of the low noise amplifier is 2.2dB and the overall noise figure of the receiver is 4.5dB. The signal is then mixed with the 1.40GHz local signal from the phase-locked multiplier in the image rejection mixer. The resultant 1st IF signal (20.405MHz) is again down-converted to 405kHz. The 2nd IF signal is phase-compared with the reference signal from the synthesizer (hp3336A). The resultant error signal is filtered by the low-pass amplifier and used to tune electronically the 10MHz voltage-controlled crystal oscillator (VCXO) to the maser frequency. The 10MHz output signal of the VCXO is distributed to the multipliers, the synthesizer, the second pulse generator, the cavity auto-tuner and the VLBI system, via the distribution amplifier with 120dB isolation.

The temperature fluctuation will cause the phase fluctuation of the receiver front end. Therefore the front end, which is enclosed by the broken line in Fig. 6, is thermally controlled by the peltier module to improve the phase stability. The stability of the temperature is 5mK. The front end is mounted in the physics package.

In the VLBI experiment the frequency difference between the local oscillators of the VLBI stations should be less than 1×10^{-12} in order to suppress the phase rotation of the cross-correlation spectrum. Therefore the frequency of the 10MHz output signal is required to be finely adjusted. This can be carried out by the synthesizer of which the setting resolution is 7×10^{-13}.

2.2.2 Cavity auto-tuner

The maser is equipped with the cavity auto-tuner [9], of which the block diagram is shown in Fig. 7. The output signal of the low noise amplifier of #1 maser (1.42GHz) and the output signal of the

phase-locked multiplier of #2 maser (1.40GHz) are mixed in the image rejection mixer. The resultant IF signal (20.405MHz) is mixed with the IF signal of #2 maser and the beat signal between the masers is obtained. The beat signal is then divided and its period is measured by the counter. The hydrogen beam is modulated by the mechanical shutter, which is driven by the pulse motor. The CPU (Z80) calculates the difference between the beat periods at Hi beam and Lo beam, and generates the varactor control signals and the shutter control signals. The CPU also controls the loop gain, the measurement mode, and the other measuring parameters of the cavity auto-tuning.

If a miscount of the beat period happens, the varactor control voltage and, hence, the cavity frequency may be changed by a large amount. To avoid this miscount the CPU monitors the difference between the newly and last generated varactor control voltages. If the difference exceeds the preset limit, the CPU rejects the new value as abnormal and holds the varactor control voltage at the last value. Then the measurement is repeated again.

3. Frequency stability of the masers

The frequency stability of the free running masers was measured. The period of the beat signal from the cavity auto-tuner was measured by the counter (hp5300B) and $\sigma_y(\tau)$ was calculated. The bandwidth of the measuring system was 2Hz. A C-field of 20mOe was added to one of the masers to offset the maser frequency by 1.2Hz. During the frequency stability measurement both masers were placed in the same thermal and magnetic environment. The room temperature was controlled within $\pm 1°$ C and the control cycle was about 1000 to 2000sec.

Fig. 8 shows the frequency stability obtained. It shows the τ^{-1} characteristic between 1 and 20 sec and $\tau^{-1/2}$ characteristic between 20 and 1000sec. In the VLBI experiment the observation period of a radio star is between about 10 and 20min. and the frequency stability in this region is the most important. The frequency stability obtained is better than 3×10^{-15} for the averaging period between 500 and 5000sec and is 2.4×10^{-15} for 830sec, which is enough for a VLBI experiment.

The long term frequency stability gradually deteriorates for the averaging period of more than 3000sec, and is 1.4×10^{-14} for 10^5sec. The main reason for the deterioration may be the relatively high C-field of 20mOe, which is added to one of the masers, and the inadequate stability of the C-field current source. The specification of stability of the current source is 5×10^{-5}/day. This corresponds to the maser frequency stability of 7.8×10^{-14}/day for the C-field of 20mOe, though the measured stability is 1.0×10^{-14} for

one day. The real performance of the current source may be better than the specification, which explains the discrepancy between the values. However it is very probable that the long term frequency stability is restricted by the stability of the current source. In VLBI experiments the maser which distributes the standard frequency and time signal to the K-3 system is operated under the C-field of 0.2mOe and the fluctuation of the current source can be neglected. Fig. 9 shows the monitor record of the beat period between the masers and the 10MHz phase comparison among the masers and a commercial Cs clock.

4. Sensitivity to the environment

The frequency of a maser is disturbed by several environmental factors. They are the room temperature, the external magnetic field, the barometric pressure, and the mechanical vibration. The influence of the last two factors could not been evaluated because the measurement facilities were not available.

As stated above, the temperature of the room where the masers are placed is controlled within $\pm 1°C$ and the control cycle is about 1000 to 2000sec. The maser frequency is not significantly disturbed by this temperature control, but is disturbed by a slower temperature change. In order to evaluate this influence the room temperature was changed by $\pm 5.5°C$ and the change of the beat frequency was monitored. The time constant of the temperature change was 3.9hours. During the measurement the laboratory type maser of which the cavity was auto-tuned was used as the reference maser. The reference maser was placed in another room and independent of the temperature change. The change of the beat period was measured 24hours after the temperature had been changed. It was 1.5×10^{-13} and the temperature sensitivity of the maser is $2.3\times10^{-14}/°C$.

In order to evaluate the influence of the external magnetic field, a Helmholtz coil was wound on the vacuum bell jar and a vertical magnetic field of 1G was added. The maser was operated under the 1mOe C-field during the measurement. The measured magnetic sensitivity is $2.5\times10^{-13}/G$, and the magnetic shielding factor is 15000.

The above measurement was carried out at the RRL Headquarters, where the masers had been developed, and the measured value was considered to be good enough for the VLBI experiment under the usual geomagnetic circumstances. However, after the masers had been transported to Kashima Branch, where the VLBI station of RRL is located, frequency fluctuation of $4\sim5\times10^{-14}$ was observed only during the VLBI experiments. During the VLBI experiments a large parabolic antenna, 26m in diameter and 160ton in weight, was swung to track the radio stars. This movement of the antenna disturbed the

environmental magnetic field. The fluctuation of the magnetic field in the maser room, which is located about 20m distant from the basement of the antenna, has been measured by using a magnetic flux gate meter. The results are shown in Fig.10 and Fig.11. Fig.10 shows the variation of the magnetic field in the maser room when the azimuth of the antenna is swept. Fig.11 shows the fluctuation of the magnetic field in the maser room during the VLBI experiment which was carried out at the end of August 1984. The magnetic disturbance amounts to more than 10mG. During the VLBI experiment one maser was operated under the 0.2mOe C-field and used as the time and frequency standard of the K-3 system, while the other maser was operated under the 20mOe C-field and used as the reference maser. The magnetic variation disturbed the reference maser. Later the C-field of the reference maser was set to 6mOe and the fluctuation of the maser frequency reduced to 1×10^{-14}.

Therefore it should be recommended to check the external magnetic field variation and to operate the maser under low C-field at VLBI stations. Especially at mobile VLBI stations the magnetic disturbance of the antenna may be large because the maser is placed very close to the antenna.

5. Conclusion

Two field operable hydrogen masers have been developed as the time and frequency standard of the K-3 VLBI system. The measured performance fully satisfies the requirements of the K-3 system, and they are now playing an important role as the time and frequency standard of the K-3 system at Kashima Branch.

The magnetic disturbance by the VLBI antenna tracking, which has been observed at Kashima station, suggests that it is necessary to check the magnetic environment in the maser room and to operate the maser under low C-field for VLBI experiments.

Acknowledgements

The authors wish to thank Mr. Saburi, the former Associate Director General of RRL, and Dr. Yoshimura, Section Chief of Standard Frequency and Time Research Section of RRL, for valuable suggestions and support in the development of the masers. They are very grateful to the staff of VLBI project of the RRL Headquarters and Kashima Branch.

References

[1] Kawaguchi, N., Sugimoto, Y., Kuroiwa, H., Kondo, T., Hama, S., Amagai, J., Morikawa, T., and Imae, M.; "The K-3 Hardware System Being Developed in Japan and Its Capability", NOAA

Technical Report NOS 95 NGS 24 Proceedings of Symposium No.5: Geodetic Applications of Radio Interferometry, pp.163-176 May 1982

[2] Takahashi, F., Yoshino, T., Murakami, H., Koike, K., Kunimori ,H., and Kondo, T.; "K-3 VLBI Software Development for International Experiments", NOAA Technical Report NOS 95 NGS 24 Proceedings of Symposium No.5: Geodetic Applications of Radio Interferometry, pp.177-183, May 1982

[3] VLBI Research Development Group, RRL; "The First US-JAPAN VLBI Test Observation by Use of K-3 System of the Radio Research Laboratories", J. Radio Res. Labs. vol.31, No.132, pp.31-37 March 1984

[4] Hermannsfeld, W.D. and Salsburg, B.L.; "Demagnetization of Magnetic Shield in the Presence of the Earth's Field", Rev. Sci. Instrum., 35, 906E, 1964

[5] Levine, M.W., Vessot, R.F., and Mattison, E.F.; "Performance Evaluation of the SAO VLG-11 Atomic Hydrogen Maser", Proceedings of the 32nd Annual Symposium on Frequency Control, pp.477-485, 1978

[6] Sabisky, E.S. and Weaklin, H.A.; "An Operating Development Model Spacecraft Hydrogen Maser", Proceedings of the 32nd Annual Symposium on Frequency Control, pp.499-505, 1978

[7] Timoshenco, S.; "Strength of Materials Part II :Advanced Theory and Priblems", Third Edition 1956 D. Van Nostrand Company Inc., New York

[8] Levine, M.W., Vessot, R.F., Nystrom, G., Hoffman, T. and Blomberg, E.; "A New Generation of SAO Hydrogen Masers", Proceedings of the 31st Annual Symposium on Frequency Control, pp.525-534, 1977

[9] Brousseau, R. and Vanier, J.; "An Electronic System for the Tuning of Masers", IEEE Trans. IM-22, 4, pp.367-375, Dec. 1973

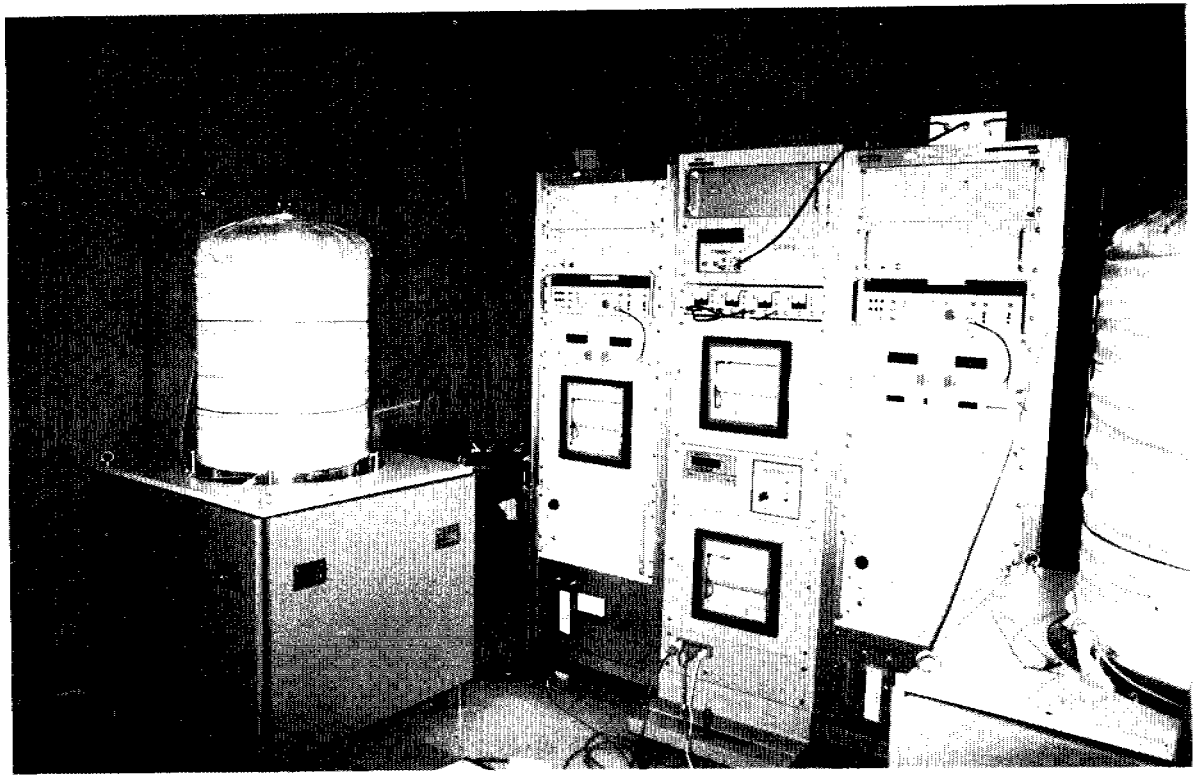

Fig.1 The hydrogen masers for K-3 VLBI system

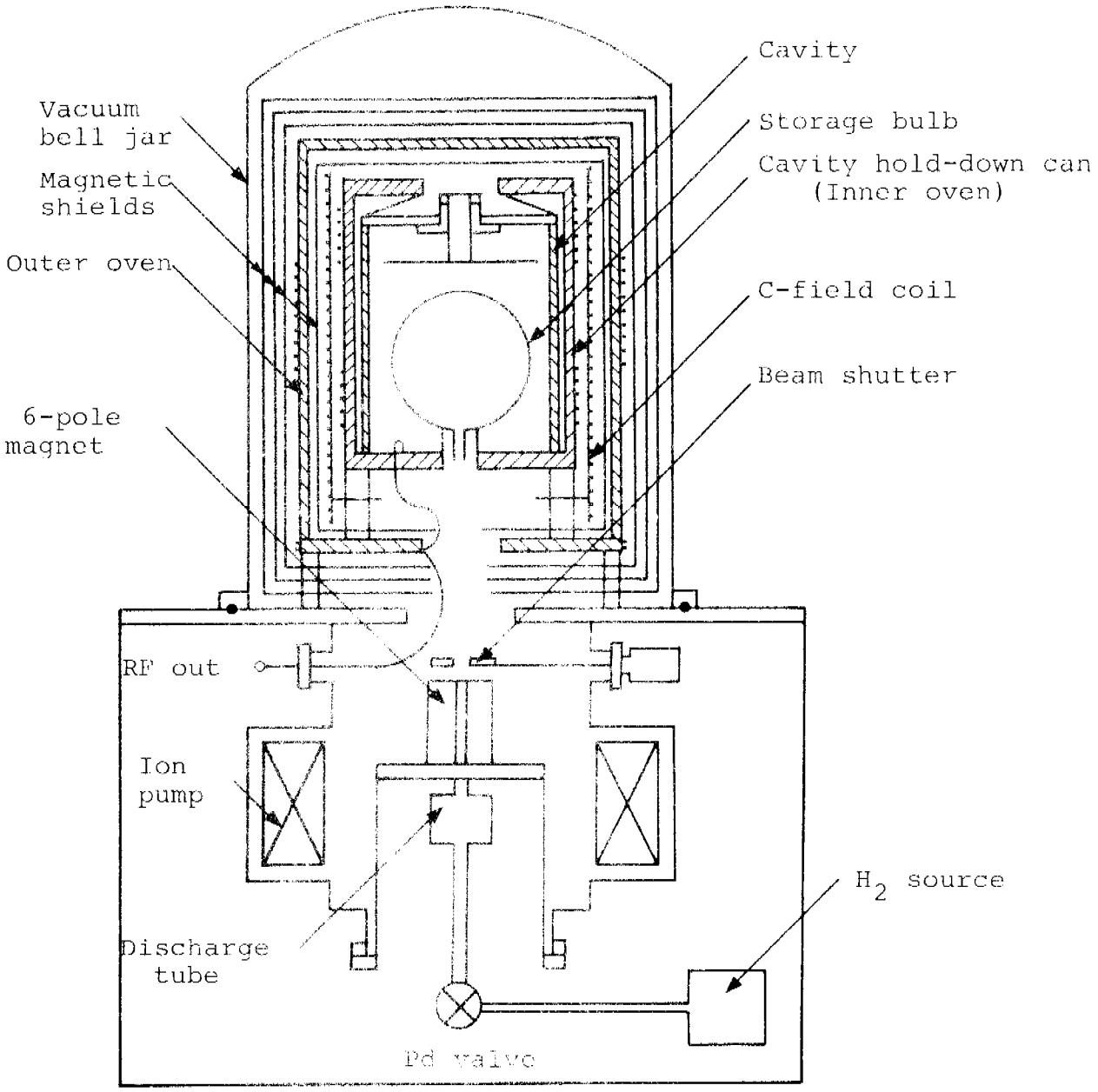

Fig.2 Structure of the maser for K-3 VLBI system

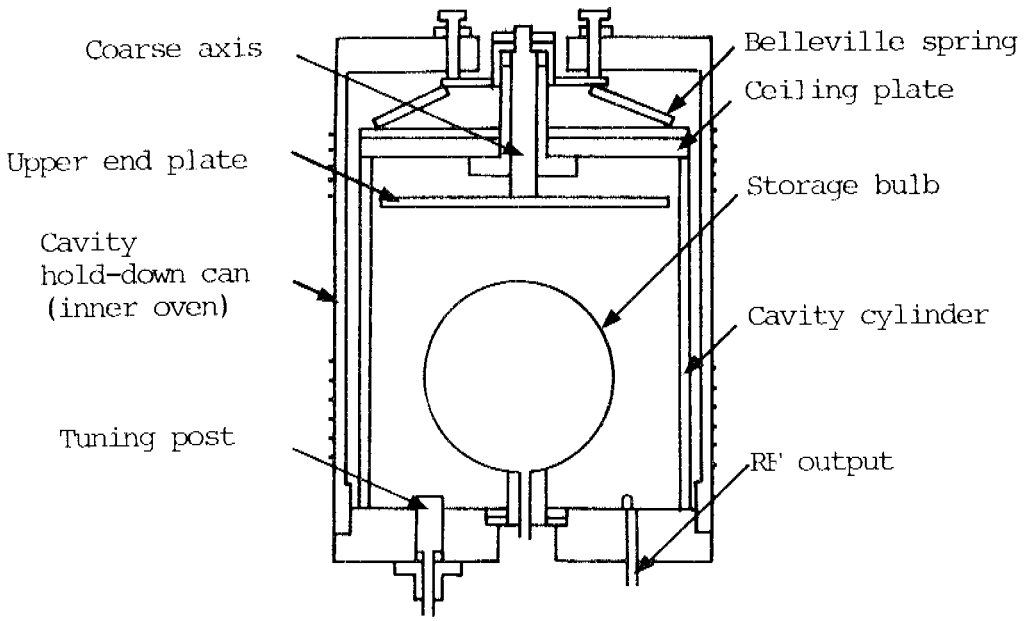

Fig.3 Structure of the cavity

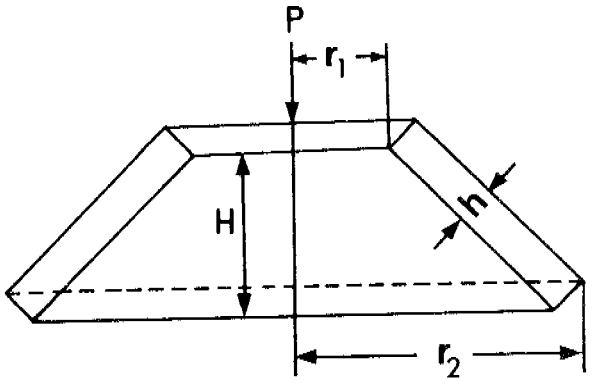

Fig.4 Belleville spring

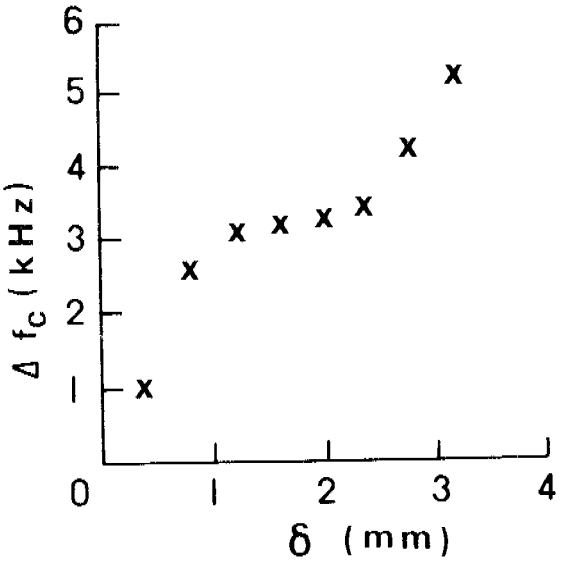

Fig.5 Stabilization of cavity by Belleville spring

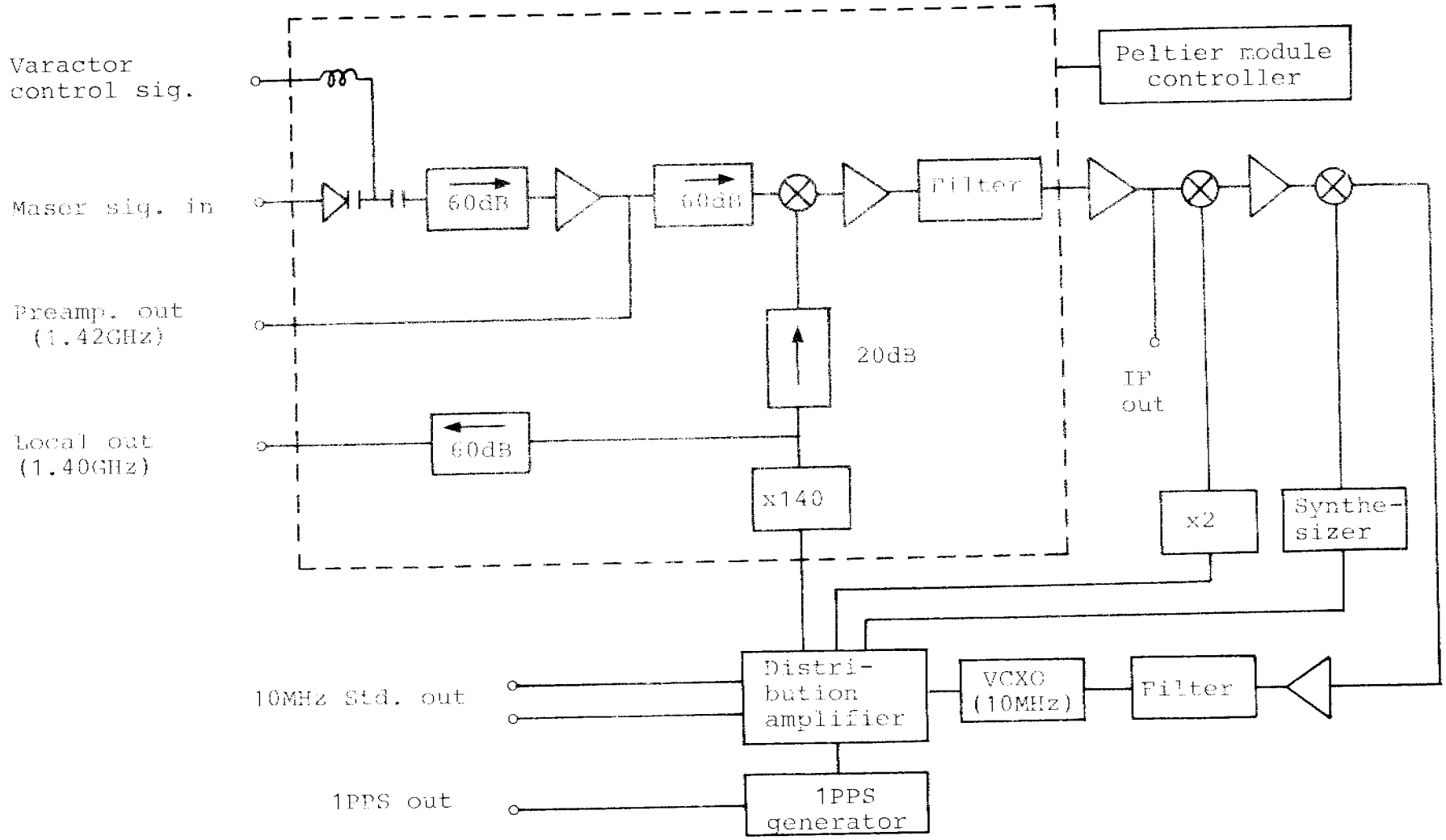

Fig.6 Block diagram of the phase-lock receiver

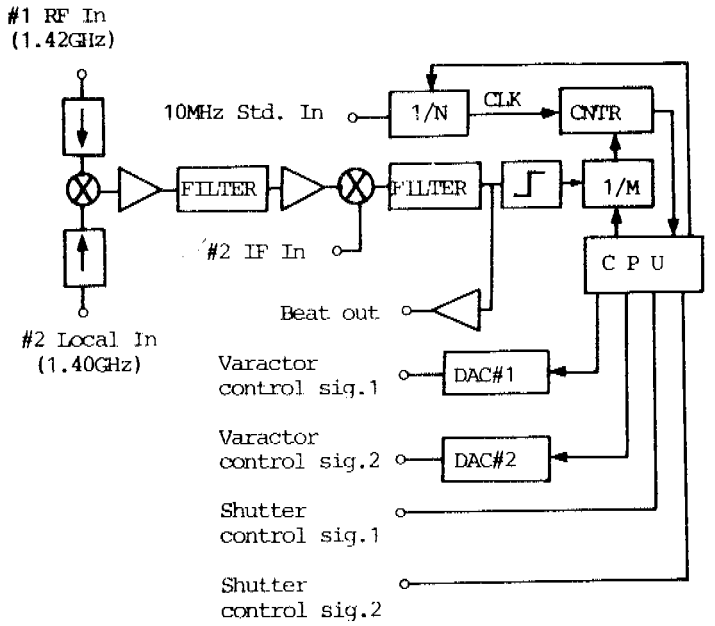

Fig.7 Block diagram of auto-tuner

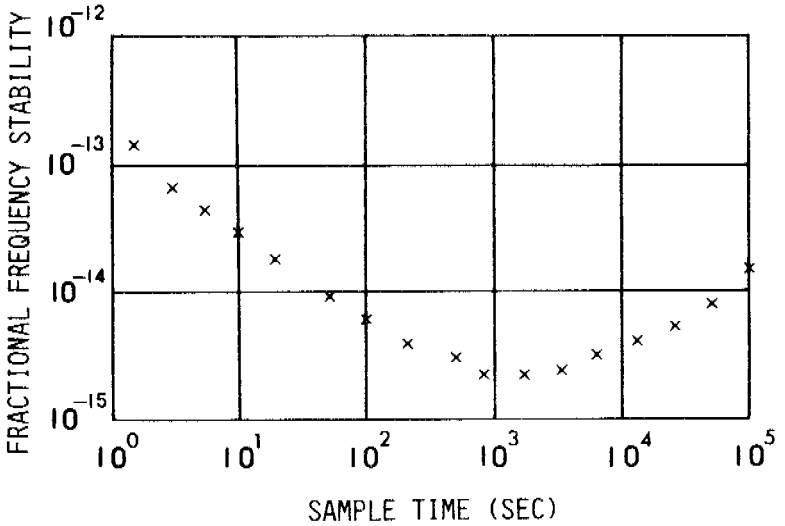

Fig.8 Frequency stability of the masers
for K-3 VLBI system
298

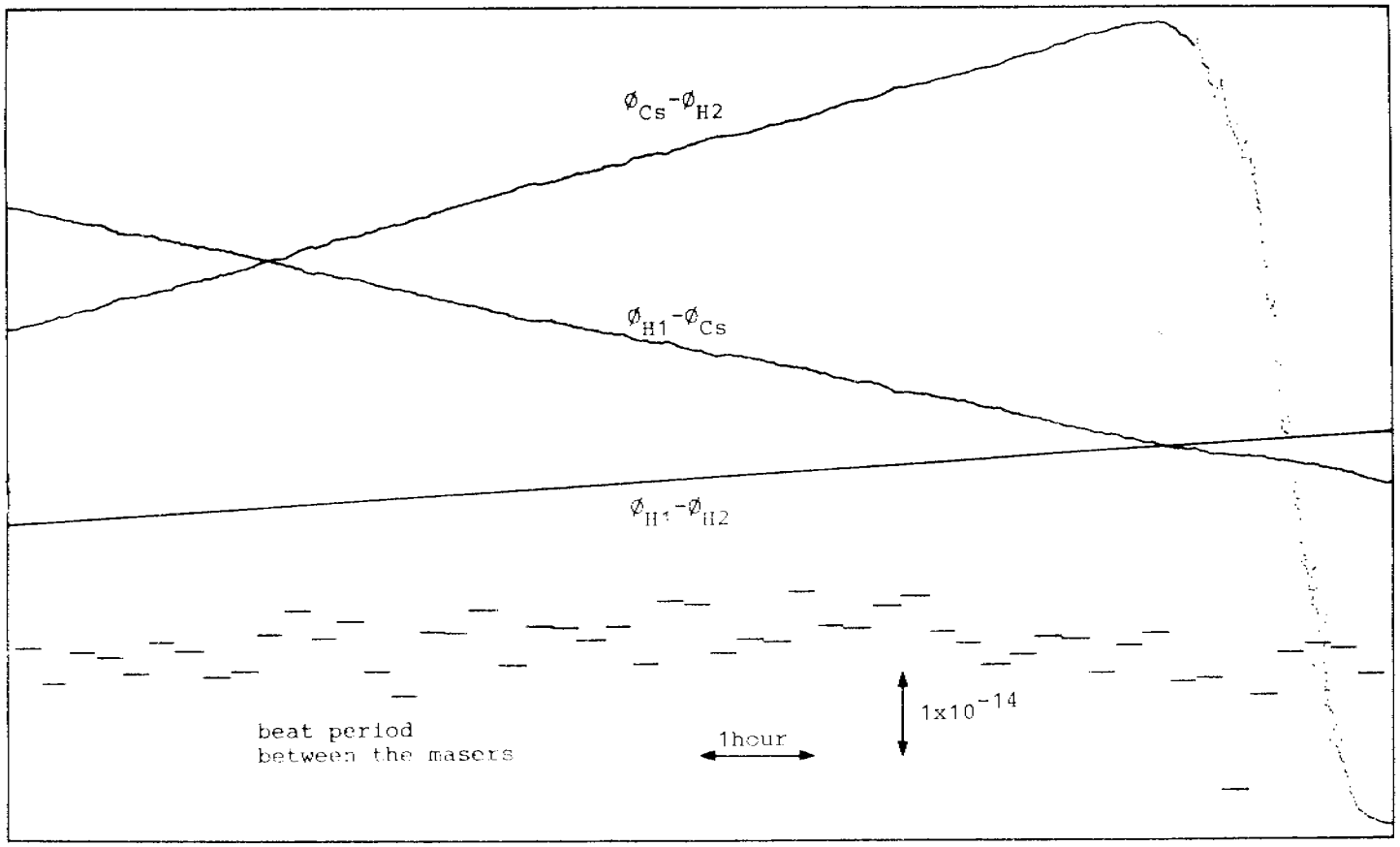

Fig.9 Chart record of the beat period and 10MHz phase comparison between the masers and a commercial Cs

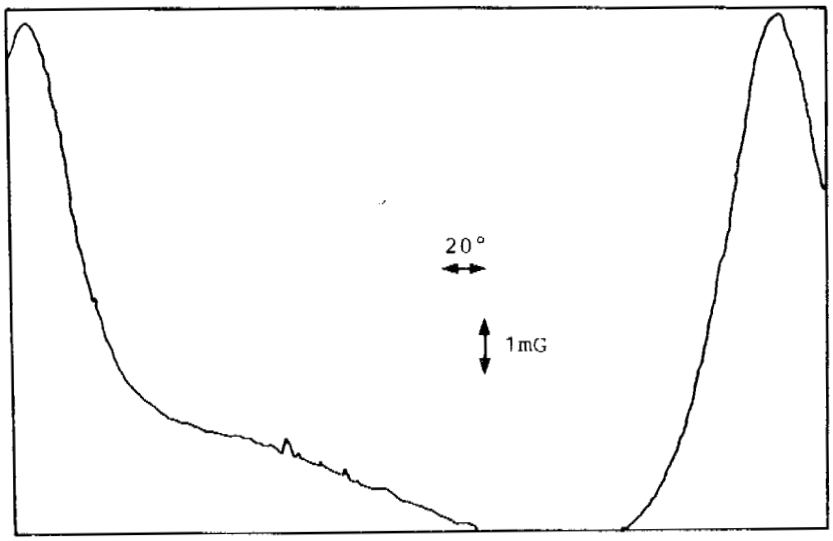

Fig.10 Change of the external magnetic field when azimuth of the antenna is sweeped

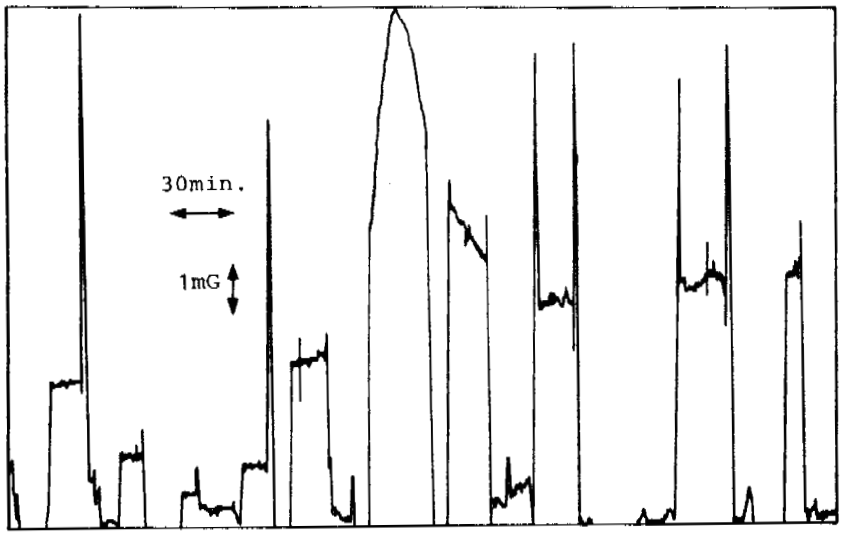

Fig.11 Change of the external magnetic field during the VLBI experiment

QUESTIONS AND ANSWERS

LAUREN RUEGER, JOHNS HOPKINS: Did you have both of the field operable masers at the site in you operating mode, or did you have only one?

MR. MORIKAWA: We have two hydrogen masers at the VLBI station. We used the first maser as the frequency source, and the other is used as a monitor, but the second maser can, of course, distribute standard signals to the system if the first maser has some trouble.

ALBERT KIRK, JET PROPULSION LABORATORY: What is the output power of the maser?

MR. MORIKAWA: It depends on the flux of the hydrogen beam. The maximum power is minus 95 dBm.

MR. KIRK: For the data that you have shown on the graph, what is the output power while that data was taken?

MR. MORIKAWA: Minus 95 dBm.

MR. KIRK: How long do you expect the ion pumps to last?

MR. MORIKAWA: About two years or more. One maser operated about two years, at which time the ion pump went down, but it recovered.

MR. MCCOUBREY: And they operated continuously during this time?

MR. MORIKAWA: Yes.

VICTOR REINHARDT, HUGHES AIRCRAFT COMPANY: In the Allan variance data you showed, was the drift removed?

MR. MORIKAWA: It was not removed.

MR. REINHARDT: What was the frequency drift per day?

MR. MORIKAWA: a few parts in ten to the minus 14.